STAIRVILLE

CLB5 2P RGBWW Compact LED Bar

LED lighting set

th•mann
MUSIC IS OUR PASSION

user manual

Musikhaus Thomann
Thomann GmbH
Hans-Thomann-Straße 1
96138 Burgebrach
Germany
Telephone: +49 (0) 9546 9223-0
E-mail: info@thomann.de
Internet: www.thomann.de

30.03.2021, ID: 448711 (V3)

Table of contents

1 General information 5
1.1 Further information 6
1.2 Notational conventions 7
1.3 Symbols and signal words 7
2 Safety instructions 10
3 Features 14
4 Installation 15
5 Starting up 22
6 Connections and controls 25
7 Operating 33
7.1 Starting the device 33
7.2 Remote control 33
7.3 Operating on the unit 36
7.4 Menu overview 45
7.5 Functions in 4-channel DMX mode 46

7.6 Functions in 8-channel DMX mode 47
7.7 Functions in 10-channel DMX mode 48
7.8 Functions in 12-channel DMX mode 50
7.9 Reset to factory default setting 58
8 Technical specifications 59
9 Plug and connection assignments 62
10 Cleaning 63
11 Protecting the environment 64

1 General information

This user manual contains important information on the safe operation of the device. Read and follow all safety notes and all instructions. Save this manual for future reference. Make sure that it is available to all persons using this device. If you sell the device to another user, be sure that they also receive this manual.

Our products and user manuals are subject to a process of continuous development. We therefore reserve the right to make changes without notice. Please refer to the latest version of the user manual which is ready for download under *www.thomann.de*.

1.1 Further information

On our website (*www.thomann.de)* you will find lots of further information and details on the following points:

Download	This manual is also available as PDF file for you to download.
Keyword search	Use the search function in the electronic version to find the topics of interest for you quickly.
Online guides	Our online guides provide detailed information on technical basics and terms.
Personal consultation	For personal consultation please contact our technical hotline.
Service	If you have any problems with the device the customer service will gladly assist you.

1.2 Notational conventions

This manual uses the following notational conventions:

Letterings

The letterings for connectors and controls are marked by square brackets and italics.

Examples: *[VOLUME]* control, *[Mono]* button.

Displays

Texts and values displayed on the device are marked by quotation marks and italics.

Examples: *'24ch'*, *'OFF'*.

1.3 Symbols and signal words

In this section you will find an overview of the meaning of symbols and signal words that are used in this manual.

Signal word	Meaning
DANGER!	This combination of symbol and signal word indicates an immediate dangerous situation that will result in death or serious injury if it is not avoided.
WARNING!	This combination of symbol and signal word indicates a possible dangerous situation that can result in death or serious injury if it is not avoided.
NOTICE!	This combination of symbol and signal word indicates a possible dangerous situation that can result in material and environmental damage if it is not avoided.

Warning signs	Type of danger
	Warning – high-voltage.
	Warning – dangerous optical radiation.

Warning signs	Type of danger
	Warning – suspended load.
	Warning – danger zone.

2 Safety instructions

Intended use

This device is intended for use as an electronic lighting effect by means of LED technology. The device is designed for professional use only and is not suitable for use in households. Use the device only as described in this user manual. Any other use or use under other operating conditions is considered to be improper and may result in personal injury or property damage. No liability will be assumed for damages resulting from improper use.

This device may be used only by persons with sufficient physical, sensorial, and intellectual abilities and having corresponding knowledge and experience. Other persons may use this device only if they are supervised or instructed by a person who is responsible for their safety.

Extend the operating life of the device by regular breaks and by avoiding frequent switching on and off. The device is not suitable for continuous operation.

Safety

DANGER!

Danger for children

Ensure that plastic bags, packaging, etc. are disposed of properly and are not within reach of babies and young children. Choking hazard! Ensure that children do not detach any small parts (e.g. knobs or the like) from the unit. They could swallow the pieces and choke! Never let children unattended use electrical devices.

DANGER!

Electric shock caused by high voltages inside

Within the device there are areas where high voltages may be present. Never remove any covers. There are no user-serviceable parts inside. Do not use the device if covers, protectors or optical components are missing or damaged.

DANGER!

Electric shock caused by short-circuit

Always use proper ready-made insulated mains cabling (power cord) with a protective contact plug. Do not modify the mains cable or the plug. Failure to do so could result in electric shock/death or fire. If in doubt, seek advice from a registered electrician.

WARNING!

Eye damage caused by high light intensity

Never look directly into the light source.

WARNING!

Risk of epileptic shock

Strobe lighting can trigger seizures in photosensitive epilepsy. Sensitive persons should avoid looking at strobe lights.

NOTICE!

Risk of fire

Do not block areas of ventilation. Do not install the device near any direct heat source. Keep the device away from naked flames.

NOTICE!

Operating conditions

This device has been designed for indoor use only. To prevent damage, never expose the device to any liquid or moisture. Avoid direct sunlight, heavy dirt, and strong vibrations. Only operate the device within the ambient conditions specified in the chapter 'Technical specifications' of this user manual. Avoid heavy temperature fluctuations and do not switch the device on immediately after it was exposed to temperature fluctuations (for example after transport at low outside temperatures). Dust and dirt inside can damage the unit. When operated in harmful ambient conditions (dust, smoke, nicotine, fog, etc.), the unit should be maintained by qualified service personnel at regular intervals to prevent overheating and other malfunction.

NOTICE!

Power supply

Before connecting the device, ensure that the input voltage (AC outlet) matches the voltage rating of the device and that the AC outlet is protected by a residual current circuit breaker. Failure to do so could result in damage to the device and possibly injure the user. Unplug the device before electrical storms occur and when it is unused for long periods of time to reduce the risk of electric shock or fire.

NOTICE!

Possible damage due to installation of a wrong fuse

The use of different types of fuses can cause serious damage to the unit. Fire hazard! Only fuses of the same type may be used.

NOTICE!

Risk of short-circuits

Short-circuits may cause irreparable damages of the device. They can occur when you remove or change cables of the spots during operation. Disconnect the device from the power supply before you change the cabling.

NOTICE!

Damages due to disconnection during operation

Only operate the unit when all spotlights are connected. The disconnection of LED spotlights during operation may damage the unit. Disconnect the unit from the power supply before disconnecting LED spotlights.

3 Features

The LED light set offers an ideal combination of warm white and coloured light for parallel illumination of stage and dance floor in various shades.

- Two LED spots with each seven 4-in-1 LEDs, 4 W each, pre-mounted on T-bar
- Control via DMX (four different modes), via buttons and display on the unit, foot switch as well as infrared remote control
- Preprogrammed automatic shows
- Sound control
- Master / Slave mode
- Noiseless operation due to convection cooling
- Sturdy transport bag included
- Optionally available accessories: Stand, radio foot switch unit (item no. 370552), tethered foot switch unit (item no. 279058),infrared remote control (item no. 354223)

For technological reasons, the light output of LEDs decreases over their lifetime. This effect increases with higher operating temperature. You can extend the service life of the illuminants by providing adequate ventilation and operating the LEDs with the lowest possible brightness.

4 Installation

Unpack and check carefully there is no transportation damage before using the unit. Keep the equipment packaging. To fully protect the product against vibration, dust and moisture during transportation or storage use the original packaging or your own packaging material suitable for transport or storage, respectively.

WARNING!

Risk of injury caused by falling objects

Make sure that the installation complies with the standards and rules that apply in your country. Always secure the device with a secondary safety attachment, such as a safety cable or a safety chain.

NOTICE!

Damages due to disconnection during operation

Only operate the unit when all spotlights are connected.

The disconnection of LED spotlights during operation may damage the unit. Disconnect the unit from the power supply before disconnecting LED spotlights.

NOTICE!

Risk of overheating

The distance between light output and the illuminated surface must be more than 1.5 m (19.7in).

Provide sufficient ventilation.

The ambient temperature must always be below 40 °C (104 °F).

NOTICE!

Use of stands

When mounting the device onto a stand, ensure that the stand is in a safe and stable position and that the weight of the device does not exceed the maximum permissible load capacity of the stand.

NOTICE!

Possible data transmission errors

For error-free operation make use of dedicated DMX cables and do not use ordinary microphone cables.

Never connect the DMX input or output to audio devices such as mixers or amplifiers.

Please note that this device must not be connected to a dimmer.

Pre-mounted spots

The two spots are pre-mounted on the T-bar.

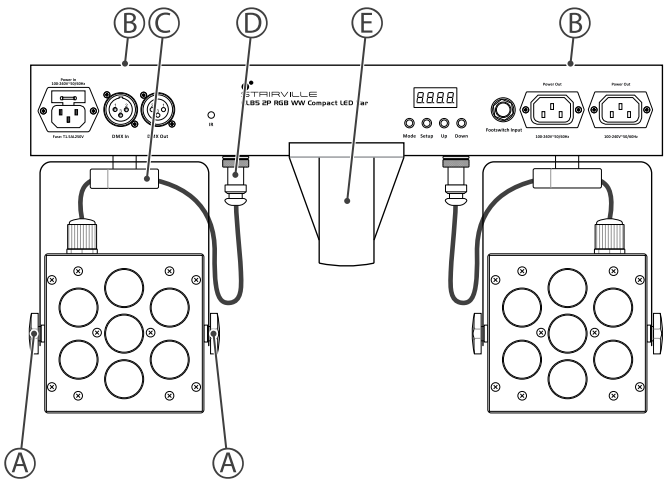

A	Locking screw for fixing the inclination angle.
B	Threads for attaching additional effects units or for hanging using the C-hooks.

C	Locking screw for fixing the spots on the T-bar and the horizontal orientation (dispersion direction).
D	Electrical connection of the spot at the T-bar (pre-mounted).
E	35 mm flange to mount the T-bar on a stand.

Inserting the battery into the remote control

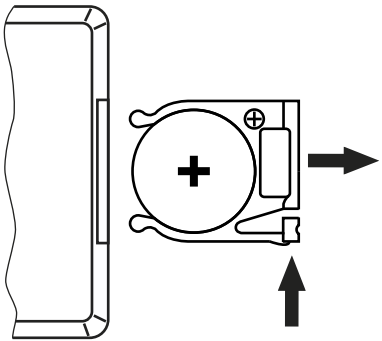

Press the lock of the battery holder to the centre of the housing and pull out the battery holder like a drawer. Insert the battery. The battery is correct if the positive pole points to the housing base of the remote control. Slide the battery holder back into the remote until it clicks into place.

When shipping, the battery is already installed in the remote and protected against discharge by a transparent plastic foil. Remove the plastic foil prior to first use.

5 Starting up

Create all connections while the device is off. Use the shortest possible high-quality cables for all connections. Take care when running the cables to prevent tripping hazards.

Connections in DMX mode

Connect the DMX input of the device to the DMX output of a DMX controller or another DMX device. Connect the output of the first DMX device to the input of the second one, and so on to form a daisy chain. Always ensure that the output of the last DMX device in the daisy chain is terminated with a resistor (110 Ω, ¼ W).

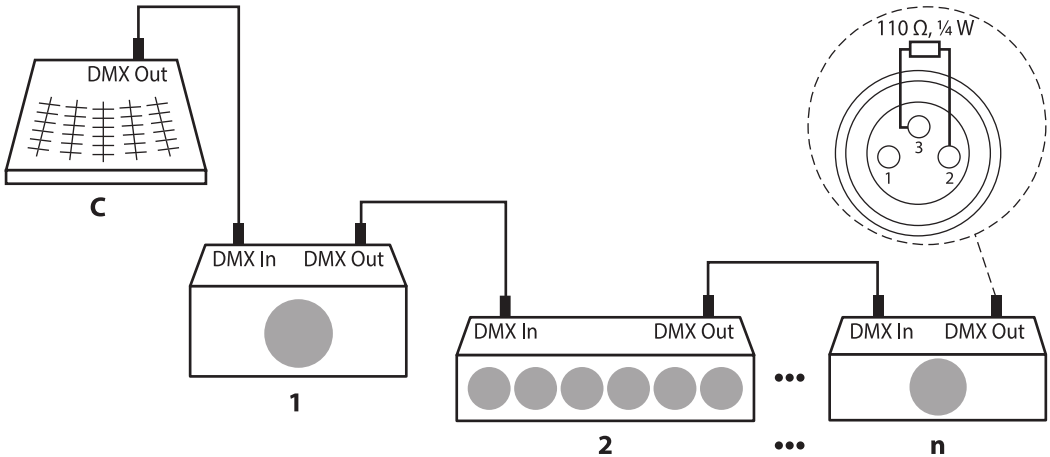

Connections in master/slave mode

When you configure a group of devices in master/slave mode, the first unit will control the other units for an automatic, sound-activated, synchronized show. This function is ideal when you want to start a show immediately. Connect the DMX output of the master device to the DMX input of the first slave device. Then connect the DMX output of the first slave device to the DMX input of the second slave device and so on.

6 Connections and controls

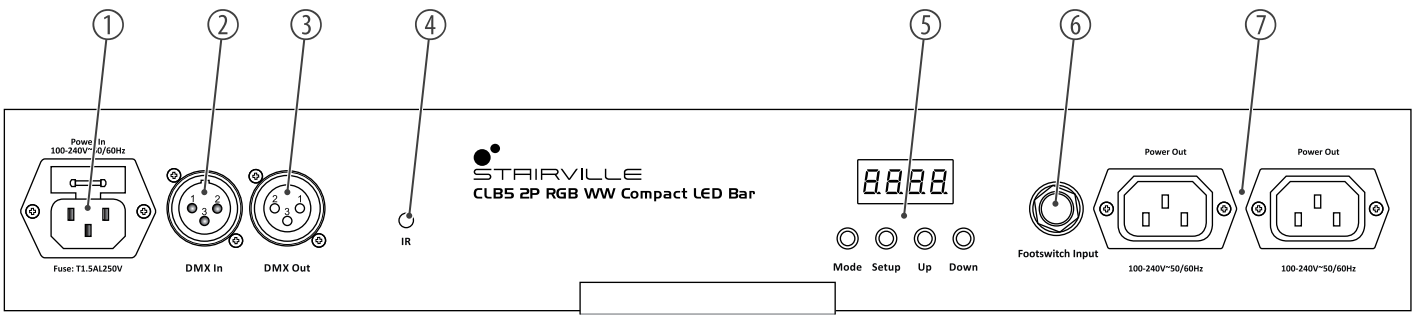

1	*[Power In]* IEC chassis plug for power supply with fuse holder.
2	*[DMX In]* DMX input
3	*[DMX Out]* DMX output
4	Infrared sensor for the remote control signals
5	Display and function buttons.
	[Mode] Activates the main menu and toggles between menu items. Closes an opened submenu.
	[Setup] Selects an option of the respective operating mode, confirms the set value.
	[Up] Increases the displayed value by one.

	[Down] Decreases the displayed value by one.
6	*[Foot switch Input]* 1/4" phone socket to connect the foot controller unit
7	*[Power Out]* IEC chassis sockets for the power supply of further devices.

Foot switch unit (optionally available)

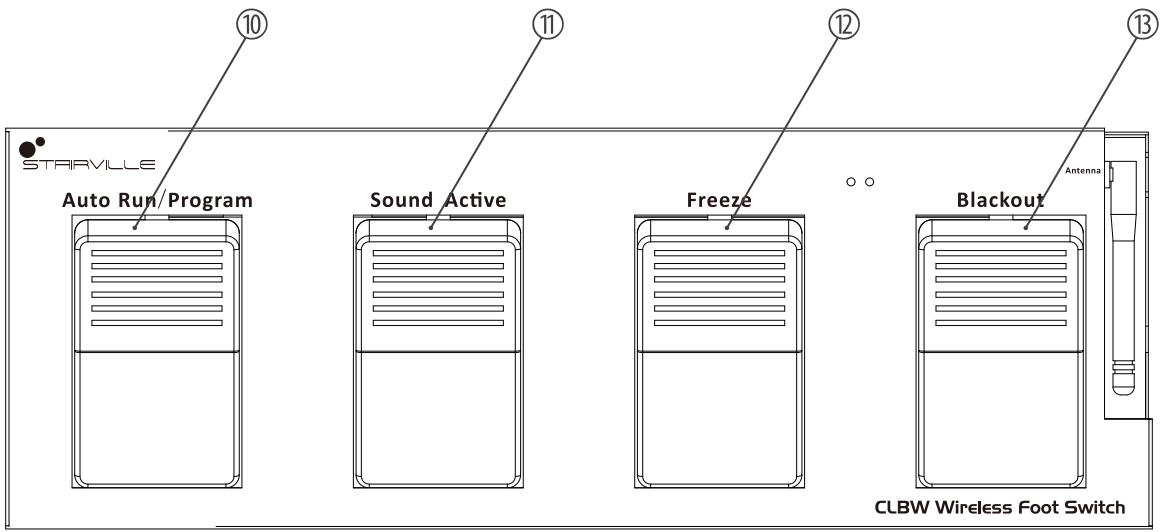

10	*[Auto Run/Program]* Activates the automatic mode (playback of preprogrammed automatic shows).
11	*[Sound Active]* Activates the sound-controlled mode (playback of sound-controlled automatic shows).
12	*[Freeze]* Pauses the running show and resumes it after a break.
13	*[Blackout]* Blackouts all LEDs and turns them back on again.

Infrared remote control

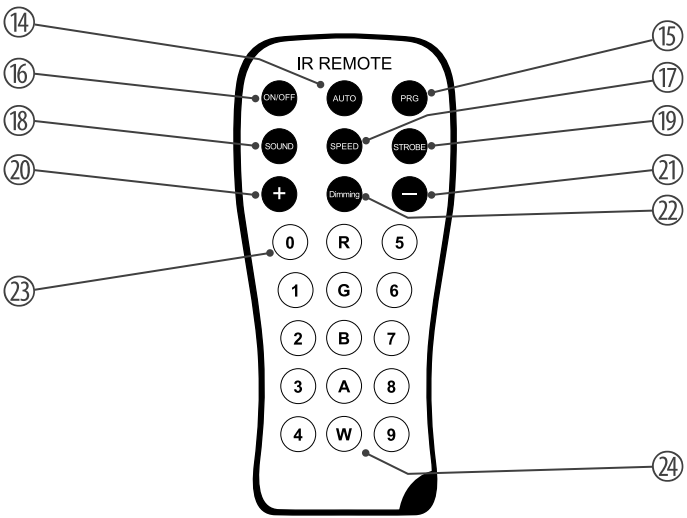

14	*[AUTO]* Activates the Automatic mode.
15	*[PRG]* Activates the operating mode 'Preprogrammed automatic show'. Select the desired programme with *[+]* and *[–]*.
16	*[ON/OFF]* Activates / deactivates the device.
17	*[SPEED]* Activates the setting mode for the programme speed. Adjust the speed using *[+]* and *[–]*.
18	*[SOUND]* Activates the Sound-controlled mode. Set the sensitivity of the built-in microphone with *[+]* and *[–]*.
19	*[STROBE]* Activates the setting mode for the Strobe speed. Adjust the speed using *[+]* and *[–]*.
20	*[+]* Increases the set value.

21	*[–]* Decreases the set value.
22	*[Dimming]* Activates the dimming function for basic colours. Set the value for each basic colour using *[+]* and *[–]*.
23	*[0 … 9]* Numeric buttons for direct selection of a basic colour.
24	*[R]*, *[G]*, *[B]*, *[A]*, *[W]* Buttons to select the colour shade in dimmer mode.

7 Operating

7.1 Starting the device

Connect the device to the power supply to start operation. After a few seconds, the display indicates that a reset is in progress. The device is then ready for use.

7.2 Remote control

The device can only be remote controlled if it's neither working in a Master / Slave configuration nor DMX-controlled.

Blackout

Use *[ON/OFF]* to blackout the unit or cancel the blackout.

Operating mode 'Automatic'

Press *[AUTO]*. The unit now operates in automatic stand-alone mode.

Operating mode 'Preprogrammed automatic show'

Press *[PRG]*. Use *[+]* and *[–]* to select a value between *'Pr.01'* and *'Pr.30'*.

Press *[STROBE]* and then use *[+]* | *[–]* to select a value between *'FS.00'* (slow) and *'FS.99'* (fast) to enable a strobe effect. Press again *[STROBE]* to disable the Strobe effect.

Press *[SPEED]* and then use *[+]* | *[–]* to select a value between *'SP.01'* (slow) und *'SP.99'* (fast)) or *'SP.FL'* to set the running speed of the programmes.

Sound control

Press *[SOUND]*. This activates a sound controlled automatic show.

Use *[+]* and *[–]* to adjust the sensitivity of the sound control in a range from *'SU.00'* to *'SU.31'*.

Dimming

Press *[Dimming]* to adjust the brightness level of the primary colours.

Use *[R]* (red), *[G]* (green), *[B]* (blue), *[A]* (amber), *[W]* (white) or *[1]* (UV) and then *[+]* | *[–]* to select a value between 0 and 255.

Colour selection

Use the coloured buttons to select a colour tone in any mode. The following assignment applies:

Button	Colour	Button	Colour	Button	Colour
0	Cyan	5	Magenta	R	Red
1	Purple	6	Light green	G	Green
2	Pink	7	Light blue	B	Blue
3	Yellow	8	Brown	A	Amber
4	White	9	Warm white	W	White

Reset to factory defaults

To reset the device to factory default settings, press *[ON/OFF]* to blackout the unit and then simultaneously *[9]*, *[8]*, and *[7]* on the unit.

7.3 Operating on the unit

Press *[Mode]* to activate the main menu and select an operating mode. Use *[Setup]* to select further options. Use *[Up]* and *[Down]* to change the respectively indicated value. When the display shows the desired value, press *[MODE]*.

If you do not press any key for about 30 seconds, the display will be blanked. It will be reactivated to display the previously shown menu by pressing any button.

The set values are retained even when the device is disconnected from the mains power supply.

Operating mode 'Automatic'

Automatic operation can only be activated when the unit is operating in stand alone mode or as master in a master / slave combination. This setting is only relevant if the device is not controlled via DMX.

Press *[Mode]* repeatedly until the display shows *'AUTO'*.

Operating mode 'Preprogrammed automatic show'

A preprogrammed automatic show can only be activated when the unit is operating in stand-alone mode or as master in a master / slave combination. This setting is only relevant if the device is not controlled via DMX.

Press *[Mode]* repeatedly until the display shows *'Pro'*. Press *[Setup]*. Now you can select one of the preprogrammed automatic shows. Use *[Up]* | *[Down]* to select a value between *'Pr.01'* and *'Pr.30'*.

Settings for programme 01:

For *'Pr.01'*, you can choose from 15 basic colours or blackout of all LEDs. Press *[Setup]*. Use *[Up]* | *[Down]* to select a value between *'Co.00'* and *'Co.15'* or *'OFF'* (blackout).

The following table shows the assignment of the values.

Value	Colour	Value	Colour	Value	Colour	Value	Colour
Co.00	Blackout	Co.01	Red	Co.02	Green	Co.03	Blue
Co.04	White	Co.05	Amber	Co.06	Orange	Co.07	Yellow
Co.08	Magenta	Co.09	Pink	Co.10	Cyan	Co.11	Light red
Co.12	Light green	Co.13	Light blue	Co.14	Warm white	Co.15	Cold white

To adjust the flash frequency, press *[Setup]* repeatedly until the display shows *'FL.xx'*. Now use *[Up]* | *[Down]* to select a value between *'FL.00'* (slow) and *'FL.99'* (fast).

Settings for programmes 02 … 30:

To adjust the speed of the selected auto show, press *[Setup]* repeatedly until the display shows *'SPxxx'*. Now use *[Up]* | *[Down]* to select a value between *'SP.01'* (slow) and *'SP.99'* (fast) or *'SP.FL'*.

To adjust the flash frequency, press *[Setup]* repeatedly until the display shows *'FL.xx'*. Now use *[Up]* | *[Down]* to select a value between *'FL.00'* (slow) and *'FL.99'* (fast).

Operating mode 'Slave'

This setting is only relevant if the device is serving as Slave in a Master / Slave configuration and is not controlled via DMX.

Press *[Mode]* repeatedly until the display shows *'SLAv'* and confirm with *[Setup]*.

DMX mode

This setting is only relevant when the device is controlled via DMX.

Press *[Mode]* until the display shows *'d.xxx'*. Press *[Setup]*.

Now you can set the number of the first DMX channel to be used by the device (DMX address). Use *[Up]* | *[Down]* to select a value between 1 and 512 (the display shows *'d.001'* … *'d.512'*).

Make sure that this number matches the configuration of your DMX controller. The following table shows the highest possible DMX address for the various DMX modes.

Mode	Highest possible DMX address
4-channel	509
8-channel	505
10-channel	503
12-channel	501

Press *[Setup]*. With *[Up]* | *[Down]* you can select one of the following DMX operating modes:

- *'4-ch'* (four channels)
- *'8-ch'* (eight channels)
- *'10ch'* (ten channels)
- *'12ch'* (twelve channels)

Sound control

A sound-controlled show can only be activated when the unit is operating in stand alone mode or as master in a master / slave combination. This setting is only relevant if the device is not controlled via DMX.

Press *[Mode]* repeatedly until the display shows *'Soud'*. Press *[Setup]*. Use *[Up]* | *[Down]* to activate one of the available sound modes *'SO.01'* … *'SO.29'*.

Press *[Setup]*. Now you can adjust the sensitivity for the sound control. Use *[Up]* | *[Down]* to select a value between 0 (low sensitivity) and 31 (high sensitivity), display shows *'SU.00'* … *'SU.31'*.

Constant unicoloured pattern

A constant unicoloured pattern can only be activated when the unit is operating in stand alone mode or as master in a master / slave combination. This setting is only relevant if the device is not controlled via DMX.

Press *[Mode]* until the display shows *'Colr'*. Press *[Setup]*.

Now use *[Up]* | *[Down]* to select one of the following options:

Display	Meaning
'r.000' … *'r.255'*	Red
'g.000' … *'g.255'*	Green
'b.000' … *'b.255'*	Blue
'u.000' … *'u.255'*	White

Dimmer curve

Press *[Mode]* repeatedly until the display shows *'Set'*. Press *[Setup]*. Use *[Up]* | *[Down]* to select the menu item *'Cu.SE'* and confirm with *[Setup]*.

Use *[Up]* | *[Down]* to select one of the following dimmer curves. The dimmer curve determines how the brightness increases or decreases depending on the set DMX value.

Display	Meaning
'Cu-1'	Linear (proportional) course
'Cu-2'	Quadratic curve with a flat profile at the beginning and a steep profile at the end (Square)
'Cu-3'	Inverted quadratic curve with a steep profile at the beginning and a flat profile at the end (Inv Square)
'Cu-4'	Non-linear curve with a distinctive flat profile at the beginning and the end (S-Type)

The below figure schematically shows the adjustable dimmer curves. Depending on the selected DMX value (1) the device lights with a brightness (2) between 0 % and 100 %. Confirm the selection with *[Setup]*. Press *[Mode]*.

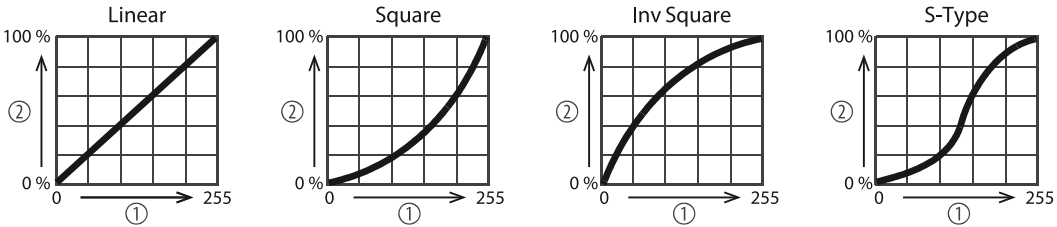

Dimmer speed

Press *[Mode]* repeatedly until the display shows *'Set'*. Press *[Setup]*. Use *[Up]* | *[Down]* to select the menu item *'di.SP'* and confirm with *[Setup]*.

With *[Up]* | *[Down]* you can choose the response speed of the dimmer between *'FASt'* (fast) and *'SLOW'* (slow). Confirm the selection with *[Setup]*. Press *[Mode]*.

Reset

Press *[Mode]* repeatedly until the display shows *'Set'*. Press *[Setup]*. Use *[Up]* | *[Down]* to select the menu item *'-rSt'* and confirm with *[Setup]*. Use *[Up]* | *[Down]* to select between *'-YES'* (carry out reset) or *'--NO'* (no reset) and confirm with *[Setup]*.

Behaviour on DMX failure

Press *[Mode]* repeatedly until the display shows *'Set'*. Use *[Up]* | *[Down]* to select the menu item *'FAIL'* and confirm with *[Setup]*. With *[Up]* | *[Down]* you can choose how the device behaves in case of a disturbed DMX transmission: *'-OFF'* (device blackouts) and *'HoLd'* (device retains the current condition). Confirm the selection with *[Setup]*.

DMX synchronisation

Press *[Mode]* repeatedly until the display shows *'Set'*. Use *[Up]* | *[Down]* to select the menu item *'Sync'* and confirm with *[Setup]*. With *[Up]* | *[Down]* you can choose how connected devices behave in case of a disturbed DMX transmission: *'On'* (devices are synchronised with each other) and *'Off'* (no synchronisation). Confirm the selection with *[Setup]*.

Enabling a wireless foot switch

Press *[Mode]* repeatedly until the display shows *'Set'*. Use *[Up]* | *[Down]* to select the menu item *'Hey'* and confirm with *[Setup]*. With *[Up]* | *[Down]* you can enable (*'On'*) or disable (*'Off'*) a wireless foot switch. Confirm the selection with *[Setup]*.

Firmware version

Press *[Mode]* repeatedly until the display shows *'InFo'*. Press *[Setup]*, the display shows *'Ver'*. Press *[Setup]* to let the device show the firmware version.

7.4 Menu overview

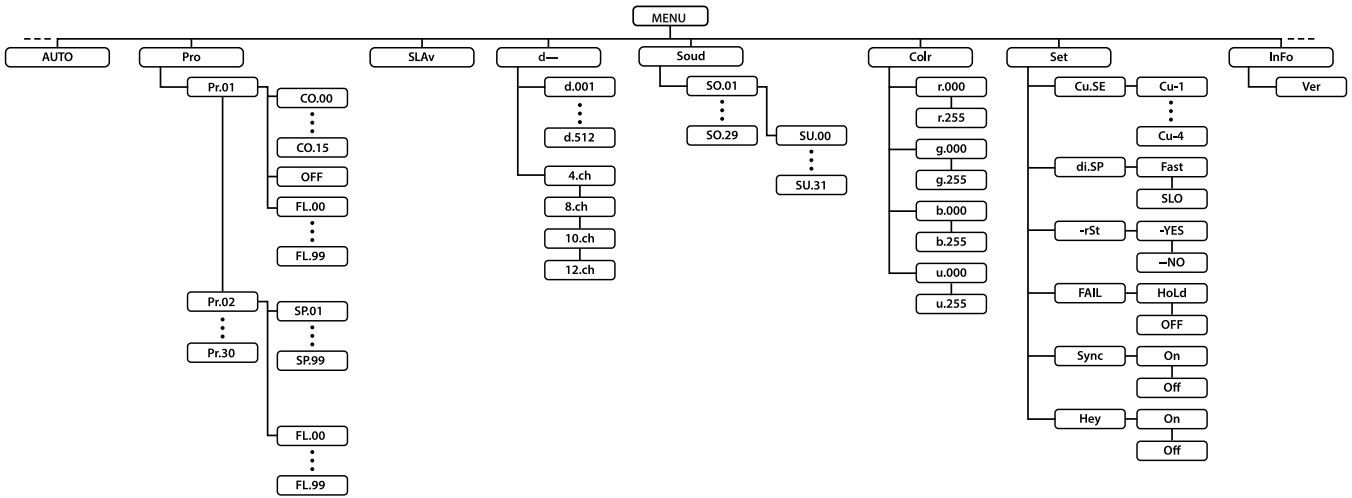

7.5 Functions in 4-channel DMX mode

Channel	Value	Function
1	0…255	Intensity red (0 % to 100 %), for all LEDs together
2	0…255	Intensity green (0 % to 100 %), for all LEDs together
3	0…255	Intensity blue (0 % to 100 %), for all LEDs together
4	0…255	Intensity white (0 % to 100 %), for all LEDs

7.6 Functions in 8-channel DMX mode

Channel	Value	Function
1	0…255	Intensity red (0 % to 100 %) for all LEDs spot 1
2	0…255	Intensity green (0 % to 100 %) for all LEDs spot 1
3	0…255	Intensity blue (0 % to 100 %) for all LEDs spot 1
4	0…255	Intensity white (0 % to 100 %) for all LEDs spot 1
5	0…255	Intensity red (0 % to 100 %) for all LEDs spot 2
6	0…255	Intensity green (0 % to 100 %) for all LEDs spot 2
7	0…255	Intensity blue (0 % to 100 %) for all LEDs spot 2
8	0…255	Intensity white (0 % to 100 %) for all LEDs spot 2

7.7 Functions in 10-channel DMX mode

Channel	Value	Function
1	0…255	Dimmer (0 % to 100 %)
2	0…255	Intensity red (0 % to 100 %) for all LEDs spot 1
3	0…255	Intensity green (0 % to 100 %) for all LEDs spot 1
4	0…255	Intensity blue (0 % to 100 %) for all LEDs spot 1
5	0…255	Intensity white (0 % to 100 %) for all LEDs spot 1
6	0…255	Intensity red (0 % to 100 %) for all LEDs spot 2
7	0…255	Intensity green (0 % to 100 %) for all LEDs spot 2
8	0…255	Intensity blue (0 % to 100 %) for all LEDs spot 2
9	0…255	Intensity white (0 % to 100 %) for all LEDs spot 2

Channel	Value	Function
10	0…4	No stroboscope effect
	5…255	Stroboscope effect, increasing speed

7.8 Functions in 12-channel DMX mode

Channel	Value	Function
1	0…255	Dimmer (0 % to 100 %)
2	0…255	Intensity red (0 % to 100 %) for all LEDs spot 1
3	0…255	Intensity green (0 % to 100 %) for all LEDs spot 1
4	0…255	Intensity blue (0 % to 100 %) for all LEDs spot 1
5	0…255	Intensity white (0 % to 100 %) for all LEDs spot 1
6	0…255	Intensity red (0 % to 100 %) for all LEDs spot 2
7	0…255	Intensity green (0 % to 100 %) for all LEDs spot 2
8	0…255	Intensity blue (0 % to 100 %) for all LEDs spot 2
9	0…255	Intensity white (0 % to 100 %) for all LEDs spot 2
10	0	No function
	1…7	Colour macro, setting via channel 11

Channel	Value	Function
	8…15	Preprogrammed automatic show 01
	16…23	Preprogrammed automatic show 02
	24…31	Preprogrammed automatic show 03
	32…39	Preprogrammed automatic show 04
	40…47	Preprogrammed automatic show 05
	48…55	Preprogrammed automatic show 06
	56…63	Preprogrammed automatic show 07
	64…71	Preprogrammed automatic show 08
	72…79	Preprogrammed automatic show 09
	80…87	Preprogrammed automatic show 10
	88…95	Preprogrammed automatic show 11
	96…103	Preprogrammed automatic show 12
	104…111	Preprogrammed automatic show 13

Channel	Value	Function
	112…119	Preprogrammed automatic show 14
	120…127	Preprogrammed automatic show 15
	128…135	Preprogrammed automatic show 16
	136…143	Preprogrammed automatic show 17
	144…151	Preprogrammed automatic show 18
	152…159	Preprogrammed automatic show 19
	160…167	Preprogrammed automatic show 20
	168…175	Preprogrammed automatic show 21
	176…183	Preprogrammed automatic show 22
	184…191	Preprogrammed automatic show 23
	192…199	Preprogrammed automatic show 24
	200…207	Preprogrammed automatic show 25
	208…215	Preprogrammed automatic show 26

Channel	Value	Function
	216…223	Preprogrammed automatic show 27
	224…231	Preprogrammed automatic show 28
	232…239	Preprogrammed automatic show 29
	240…255	Sound-controlled show
11	Function depending on setting of channel 10	
	Channel 10 = 0…7	
	0…15	R: 0; G: 0; B: 0; W: 0;
	16…31	R: 255; G: 0; B: 0; W: 0;
	32…47	R: 0; G: 255; B: 0; W: 0;
	48…63	R: 0; G: 0; B: 255; W: 0;
	64…79	R: 0; G: 0; B: 0; W: 255;
	80…95	R: 255; G: 150; B: 0; W: 0;
	96…111	R: 255; G: 180; B: 0; W: 0;

Channel	Value	Function
	112…127	R: 255; G: 255; B: 0; W: 0;
	128…143	R: 255; G: 0; B: 255; W: 0;
	144…159	R: 255; G: 0; B: 140; W: 0;
	160…175	R: 0; G: 255; B: 255; W: 0;
	176…191	R: 255; G: 0; B: 0; W: 210;
	192…207	R: 0; G: 255; B: 0; W: 210;
	208…223	R: 0; G: 0; B: 255; W: 210;
	224…239	R: 255; G: 200; B: 40; W: 90;
	240…255	R: 255; G: 255; B: 255; W: 255;
	Channel 10 = 8…239	
	0…255	Programme running speed Pr.02…Pr.30
	Channel 10 = 240…255	
	0…8	Sound-controlled operation 01

Channel	Value	Function
	9…17	Sound-controlled operation 02
	18…26	Sound-controlled operation 03
	27…35	Sound-controlled operation 04
	36…44	Sound-controlled operation 05
	45…53	Sound-controlled operation 06
	54…62	Sound-controlled operation 07
	63…71	Sound-controlled operation 08
	72…80	Sound-controlled operation 09
	81…89	Sound-controlled operation 10
	90…98	Sound-controlled operation 11
	99…107	Sound-controlled operation 12
	108…116	Sound-controlled operation 13
	117…125	Sound-controlled operation 14

Channel	Value	Function
	126…134	Sound-controlled operation 15
	135…143	Sound-controlled operation 16
	144…152	Sound-controlled operation 17
	153…161	Sound-controlled operation 18
	162…170	Sound-controlled operation 19
	171…179	Sound-controlled operation 20
	180…188	Sound-controlled operation 21
	189…197	Sound-controlled operation 22
	198…206	Sound-controlled operation 23
	207…215	Sound-controlled operation 24
	216…224	Sound-controlled operation 25
	225…233	Sound-controlled operation 26
	234…242	Sound-controlled operation 27

Channel	Value	Function
	243…251	Sound-controlled operation 28
	252…255	Sound-controlled operation 29
12	Strobe effect	
	0…4	No stroboscope effect
	5…255	Stroboscope effect, increasing speed

7.9 Reset to factory default setting

Proceed as follows to reset the device to factory defaults:

Press *[Mode]* repeatedly until the display shows *'Set'*. Use *[Up]* | *[Down]* to select the menu item *'-rSt'* and confirm with *[Setup]*. Use *[Up]* | *[Down]* to select the menu item *'-YES'* to reset the device to factory defaults or select the menu item *'--NO'* to retain the stored settings. Confirm the selection with *[Setup]*.

8 Technical specifications

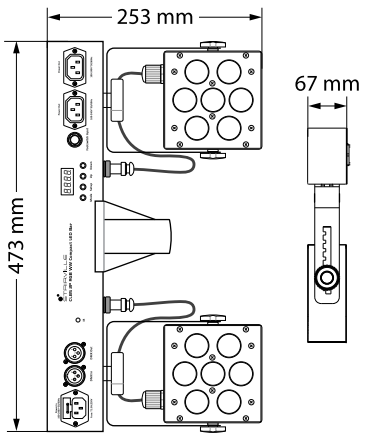

Light source		14 × RGBWW-LEDs, each 4 W
Optical properties	Beam angle	approx. 40°
	Dimmer	electronic, 0…100 %
	Shutter	electronic, 0…20 Hz
Control	DMX	
	IR remote control (not included)	
	Foot switch unit (optionally available)	
Number of DMX channels		4, 8, 10, 12
Input connections	Power supply	IEC chassis plug C14
	DMX control	XLR chassis socket, 3-pin
	Foot controller unit	1/4" jack socket
Output connections	Power supply	IEC chassis plug C13

	DMX control	XLR chassis socket, 3-pin
Power consumption		60 W
Supply voltage		100 – 240 V ~ 50/60 Hz
Fuse		5 mm × 20 mm, 2 A, 250 V, slow-blow
Battery remote control	Battery type	Lithium button cell, 3 V, CR 2025
Degree of protection		IP20
Mounting options		Tripod Stand holder: 35mm flange 2 × M10 thread on the top side
Dimensions (W × H × D)		473 mm × 253 mm × 67 mm
Weight		3.5 kg
Ambient conditions	Temperature range	0 °C…40 °C
	Relative humidity	20 %…80 % (non-condensing)

Further information

Spotlight included	Yes
Effect devices included	No
LED bars included	No
Control included	No
Stand included	No
Case / bag included	Yes

9 Plug and connection assignments

Introduction

This chapter will help you select the right cables and plugs to connect your valuable equipment so that a perfect light experience is guaranteed.

Please take our tips, because especially in 'Sound & Light' caution is indicated: Even if a plug fits into a socket, the result of an incorrect connection may be a destroyed DMX controller, a short circuit or 'just' a not working light show!

DMX connections

The unit offers a 3-pin XLR socket for DMX output and a 3-pin XLR plug for DMX input. Please refer to the drawing and table below for the pin assignment of a suitable XLR plug.

Pin	Configuration
1	Ground, shielding
2	Signal inverted (DMX–, 'cold signal')
3	Signal (DMX+, 'hot signal')

10 Cleaning

Optical lenses

Clean the optical lenses, that are accessible from the outside, regularly in order to optimize the light output. The frequency of cleaning depends on the operating environment: wet, smoky or particularly dirty surroundings can cause more accumulation of dirt on the optics of the device.

- Clean with a soft cloth using our lamp and lens cleaner (item no. 280122).
- Always dry the parts carefully.

Fan grids

The fan grids of the device must be cleaned of any contamination, such as dust, etc. on a regular basis. Before cleaning, switch off the device and disconnect mains-operated devices from the mains. Only use pH-neutral, solvent-free and non-abrasive cleaning agents. Clean the unit with a slightly damp lint-free cloth.

11 Protecting the environment

Disposal of the packaging material

For the packaging, environmentally friendly materials have been chosen that can be supplied to normal recycling.

Ensure that plastic bags, packaging, etc. are properly disposed of.

Do not just dispose of these materials with your normal household waste, but make sure that they are collected for recycling. Please follow the notes and markings on the packaging.

Disposal of batteries

Batteries do contain some hazardous chemicals so they should not be thrown away with the normal household waste. They should be returned to the manufacturer for disposal or recycled elsewhere in accordance with your local regulations.

Dispose lithium batteries only in discharged condition. Remove lithium batteries from the device before disposal. Protect used lithium batteries against potential short circuits, e.g. by covering the poles with adhesive tape. Dispose the built-in lithium batteries together with the device. Please check for an appropriate reception facility.

Disposal of your old device

This product is subject to the European Waste Electrical and Electronic Equipment Directive (WEEE) in its currently valid version. Do not dispose with your normal household waste.

Dispose of this device through an approved waste disposal firm or through your local waste facility. When discarding the device, comply with the rules and regulations that apply in your country. If in doubt, consult your local waste disposal facility.

Musikhaus Thomann · Hans-Thomann-Straße 1 · 96138 Burgebrach · Germany · www.thomann.de