the box

MBA120W MKII HTHT

battery-powered speaker

th•mann
MUSIC IS OUR PASSION

user manual

Musikhaus Thomann
Thomann GmbH
Hans-Thomann-Straße 1
96138 Burgebrach
Germany
Telephone: +49 (0) 9546 9223-0
E-mail: info@thomann.de
Internet: www.thomann.de

02.10.2020, ID: 490319 (V2)

Table of contents

1 General information 5
1.1 Further information 6
1.2 Notational conventions 7
1.3 Symbols and signal words 8
2 Safety instructions 10
3 Features 16
4 Installation 18
4.1 Speaker 19
4.2 Remote control 21
4.3 UHF handheld transmitter 22
5 Connections and operating elements 23
5.1 UHF receiver 25
5.2 Speaker 28
5.3 Remote control 41
5.4 UHF handheld transmitter 45

6 Technical specifications 48
6.1 Speaker 48
6.2 UHF receiver 51
6.3 UHF handheld transmitter 51
7 Plug and connection assignment 53
8 Cleaning 57
9 Protecting the environment 58

1 General information

This user manual contains important information on the safe operation of the device. Read and follow all safety notes and all instructions. Save this manual for future reference. Make sure that it is available to all persons using this device. If you sell the device to another user, be sure that they also receive this manual.

Our products and user manuals are subject to a process of continuous development. We therefore reserve the right to make changes without notice. Please refer to the latest version of the user manual which is ready for download under *www.thomann.de*.

1.1 Further information

On our website (*www.thomann.de)* you will find lots of further information and details on the following points:

Download	This manual is also available as PDF file for you to download.
Keyword search	Use the search function in the electronic version to find the topics of interest for you quickly.
Online guides	Our online guides provide detailed information on technical basics and terms.
Personal consultation	For personal consultation please contact our technical hotline.
Service	If you have any problems with the device the customer service will gladly assist you.

1.2 Notational conventions

This manual uses the following notational conventions:

Letterings

The letterings for connectors and controls are marked by square brackets and italics.

Examples: *[VOLUME]* control, *[Mono]* button.

Displays

Texts and values displayed on the device are marked by quotation marks and italics.

Examples: *'24ch'*, *'OFF'*.

Cross-references

References to other locations in this manual are identified by an arrow and the specified page number. In the electronic version of the manual, you can click the cross-reference to jump to the specified location.

Example: See *'Cross-references' on page 7*.

1.3 Symbols and signal words

In this section you will find an overview of the meaning of symbols and signal words that are used in this manual.

Signal word	Meaning
DANGER!	This combination of symbol and signal word indicates an immediate dangerous situation that will result in death or serious injury if it is not avoided.
CAUTION!	This combination of symbol and signal word indicates a possible dangerous situation that can result in minor injury if it is not avoided.
NOTICE!	This combination of symbol and signal word indicates a possible dangerous situation that can result in material and environmental damage if it is not avoided.

Warning signs	Type of danger
	Warning – high-voltage.
	Warning – danger zone.

2 Safety instructions

Intended use

This device is designed for sound reinforcement. Use the device only as described in this user manual. Any other use or use under other operating conditions is considered to be improper and may result in personal injury or property damage. No liability will be assumed for damages resulting from improper use.

This device may be used only by persons with sufficient physical, sensorial, and intellectual abilities and having corresponding knowledge and experience. Other persons may use this device only if they are supervised or instructed by a person who is responsible for their safety.

DANGER!

Danger for children

Ensure that plastic bags, packaging, etc. are disposed of properly and are not within reach of babies and young children. Choking hazard!

Ensure that children do not detach any small parts (e.g. knobs or the like) from the unit. They could swallow the pieces and choke!

Never let children unattended use electrical devices.

DANGER!

Electric shock caused by high voltages inside

Within the device there are areas where high voltages may be present. Never remove any covers.

There are no user-serviceable parts inside.

Do not use the device if covers, protectors or optical components are missing or damaged.

DANGER!

Electric shock caused by short-circuit

Always use proper ready-made insulated mains cabling (power cord) with a protective contact plug. Do not modify the mains cable or the plug. Failure to do so could result in electric shock/death or fire. If in doubt, seek advice from a registered electrician.

CAUTION!

Possible hearing damage

The device can produce volume levels that may cause temporary or permanent hearing impairment. Over an extended period of time, even levels that seem to be uncritical can cause hearing damage.

Decrease the volume level immediately if you experience ringing in your ears or hearing impairment. If this is not possible, keep a greater distance or use sufficient ear protectors.

NOTICE!

Risk of fire

Do not block areas of ventilation. Do not install the device near any direct heat source. Keep the device away from naked flames.

NOTICE!

Power supply

Before connecting the device, ensure that the input voltage (AC outlet) matches the voltage rating of the device and that the AC outlet is protected by a residual current circuit breaker. Failure to do so could result in damage to the device and possibly injure the user.

Unplug the device before electrical storms occur and when it is unused for long periods of time to reduce the risk of electric shock or fire.

NOTICE!

Risk of fire due to incorrect polarity

Incorrectly inserted batteries may destroy the device or the batteries.

Ensure that proper polarity is observed when inserting batteries.

NOTICE!

Possible damage by leaking batteries

Leaking batteries can cause permanent damage to the device.

Take batteries out of the device if it is not going to be used for a longer period.

NOTICE!

Possible damage of VRLA batteries due to incorrect storage

VRLA batteries may be permanently damaged due to storage in discharged or partly discharged condition.

Charge the batteries completely before prolonged rest periods. Store the batteries at +20 °C or cooler, but frost-free in as dry an environment as possible. Higher temperatures reduce considerably the lifetime of the batteries.

Storing the batteries up to six months allows to use them again directly. During extended storage periods (max. 12 to 18 months), the batteries should be recharged to avoid permanent damage due to deep self-discharge.

Notes on radio transmission

- This equipment uses a frequency range that is free of charge and registration within the European Union.
  For more information, please visit: *http://www.thomann.de*.
- When operating, make sure that transmitter and receiver are set to the same channel.
- Never set more than one transmitter to the same channel.
- Make sure that no metal objects are located between transmitter and receiver.
- Avoid interference by other radio and in-ear systems.

3 Features

The mobile PA system is characterized by the following features:

- Compact all-in-one system
- 2 × UHF wireless system (863 MHz … 865 MHz)
  - 2 × integrated UHF receiver
  - 2 × UHF handheld transmitter
  - 2 × antenna
- Power supply via AC mains power or through the built-in rechargeable VRLA batteries
- 10" woofer, 1" compression driver
- 120 W output power in mains operation, 80 W in battery operation
- Frequency range 55 Hz … 18 kHz
- 2-band equalizer
- Integrated adjustable Delay (Echo) effect
- Built-in media player with display, SD card slot, USB port and Bluetooth receiver
- Infrared remote control
- 2 × MIC / Line inputs, 1 × stereo input, 2 × RCA inputs
- 1 × line output
- Plastic housing with pole mount, carrying handle, trolley handle and casters

- Spacious storage compartment for accessories embedded in the housing
- Compatible cover (item no. 382254) not included

4 Installation

Unpack and check carefully there is no transportation damage before using the unit. Keep the equipment packaging. To fully protect the product against vibration, dust and moisture during transportation or storage use the original packaging or your own packaging material suitable for transport or storage, respectively.

Create all connections while the device is off. Use the shortest possible high-quality cables for all connections. Take care when running the cables to prevent tripping hazards.

NOTICE!

Possible property damage by magnetic fields

Loudspeakers produce a static magnetic field. Therefore, maintain an appropriate distance to devices that can be adversely affected or damaged by an external magnetic field.

4.1 Speaker

Battery operation

You can also operate the device independently of the mains power supply with the supplied integrated VRLA rechargeable batteries.

Installation and replacement of VRLA rechargeable batteries

Disconnect the device from the mains.

Remove the mounting screw of the battery compartment cover. Remove the two mounting screws of the fixing plate. Use only suitable VRLA rechargeable batteries of the same size and type (see *Chapter 6.1 'Speaker' on page 48*).

The power supply cables are colour-coded and equipped with blade receptacles. To release the connections, press slightly on the blade receptacle. When fitting and wiring VRLA rechargeable batteries, make sure the polarity is correct:

- red to + (battery 1)
- black to – (battery 2)
- blue connects + and – of the two rechargeable batteries

Then attach the rechargeable batteries with the fixing plate in the battery compartment (two screws) and replace the battery cover of the unit (one screw).

Tips on handling VRLA rechargeable batteries

- Charge the batteries completely before first use and with each charging process.
- Avoid deep discharge.
- Charge the batteries completely after each use and before extended storage. VRLA batteries may be permanently damaged due to storage in discharged or partly discharged condition.
- Storing the batteries up to six months allows to use them again directly. During extended storage periods (max. 12 to 18 months), the batteries should be recharged to avoid permanent damage due to deep self-discharge.

4.2 Remote control

Inserting the battery into the remote control

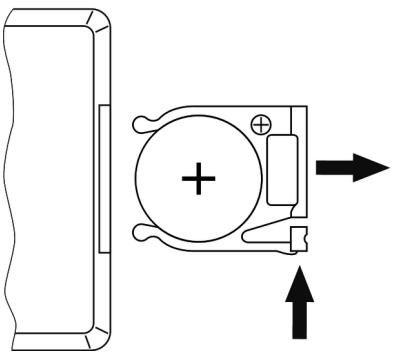

Press the lock of the battery holder to the centre of the housing and pull out the battery holder like a drawer. Insert the battery. The battery is correct if the positive pole points to the housing base of the remote control. Slide the battery holder back into the remote until it clicks into place.

When shipping, the battery is already installed in the remote and protected against discharge by a transparent plastic foil. Remove the plastic foil prior to first use.

4.3 UHF handheld transmitter

Installation and replacement of batteries

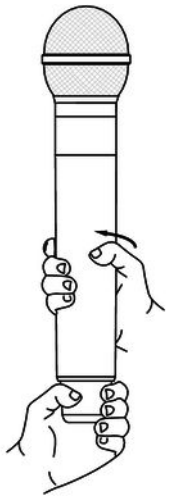

The battery compartment of the UHF handheld transmitter is located under the grip sleeve and shares the same thread with the microphone capsule. To access the battery compartment without accidentally unscrewing the microphone capsule, hold the UHF handheld transmitter at the bottom of the antenna base and turn the sleeve as shown. After replacing the battery, close the compartment again. Take care not to over tighten the grip sleeve.

Use only LR6 AA (1.5 V) batteries or rechargeable Ni-MH batteries (nickel metal hydride). Note the correct polarity when inserting the batteries.

5 Connections and operating elements

Rear view - overview

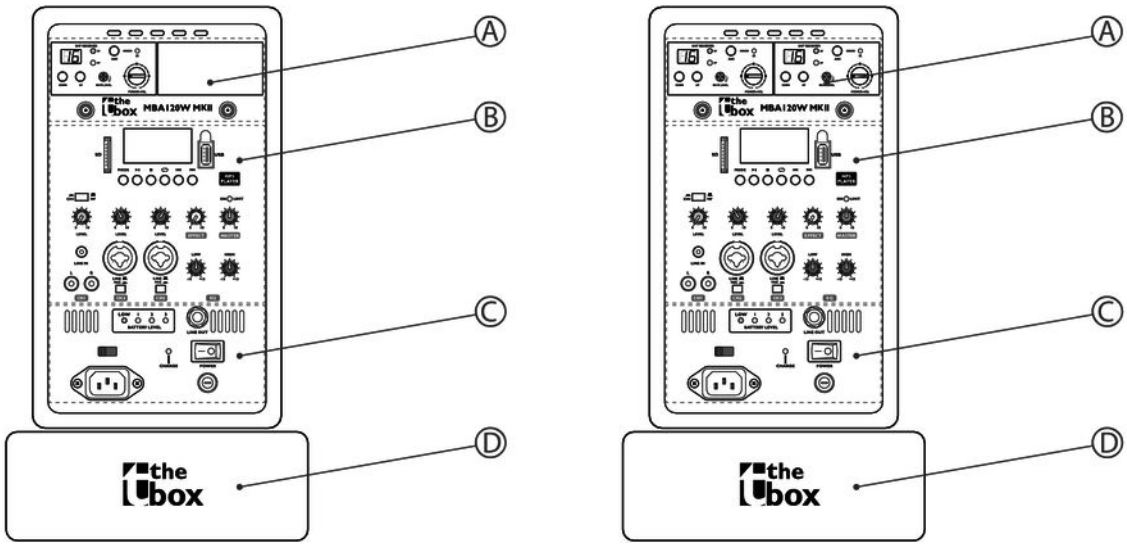

Left figure: Device with 1 UHF receiver (item no. 466279, 490317)

Right figure: Device with 2 UHF receivers (item no. 490318, 490319, 490320)

5.1 UHF receiver

Partial view A

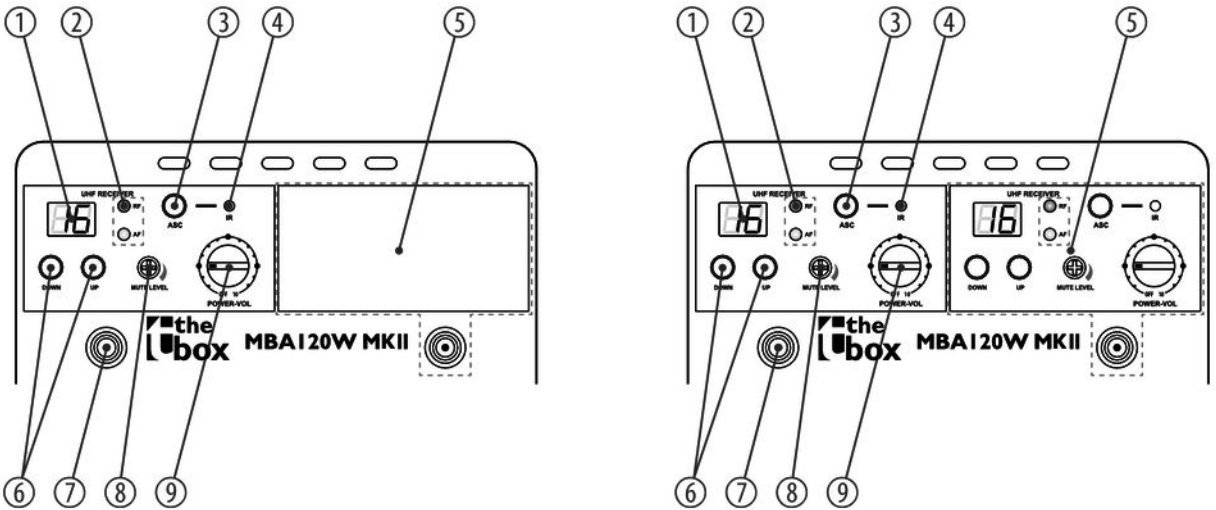

1	Channel display. Double-digit display for selecting and displaying the radio transmission channel (range *'01'* … *'16'*).
2	*[RF	AF]* The red indicator LED *[RF]* lights up when a radio signal is transmitted between UHF handheld transmitter and UHF receiver. The green indicator LED *[AF]* lights up when an audio signal from an external device is present.
3	*[ASC]* Press this button to transfer the channel setting from the device via the infrared port to the microphone.
4	*[IR]* Infrared transmitter for transmitting the channel setting from the device to the UHF handheld transmitter.
5	Item no. 466279 and 490317: Additional compartment for a second UHF receiver and second antenna jack. For mounting a second UHF receiver loosen the two screws and remove the cover plate. The cables for power supply and signal transmission are already prepared and equipped with suitable plugs. Carefully loosen the cables out of the device housing and plug them to the corresponding connectors of the UHF receiver. Place the second UHF receiver in the compartment and fasten it with the two mounting screws. Keep the cover in a safe place. Item no. 490318, 490319 and 490320: Second UHF receiver and second antenna connection socket.

6	*[DOWN | UP]* Pushbutton for selecting the radio transmission channel. Proceed as follows to find a free channel: ■ Turn the UHF handheld transmitter and UHF receiver (with the controller *[POWER-VOL]*) off. ■ Use *[DOWN | UP]* to switch through the available channels. If the displayed channel is already in use, the red LED *[RF]*. The first and (if applicable) second UHF receiver must be tuned to different channels.
7	Antenna connector.
8	*[MUTE LEVEL]* Control to set the minimum signal strength on the radio transmission channel.
9	*[POWER-VOL]* On / off switch and volume control of the UHF receiver.

5.2 Speaker

5.2.1 Partial view B

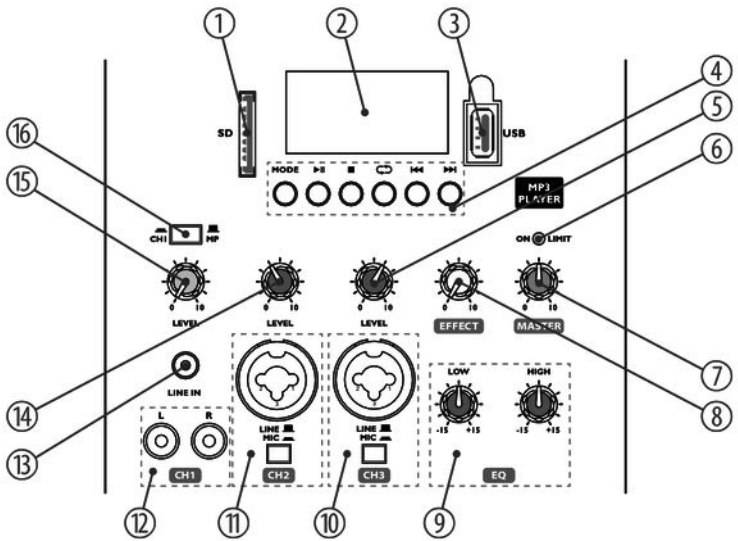

1	SD card slot
2	Display
3	USB port
4	Selection and control buttons:
	[MODE] Selection button. Press this button to select an audio source: SD card, USB input or Bluetooth port. The active source is shown on the display. For setting up and using the Bluetooth interface note *Chapter 5.2.5 'Playback via Bluetooth' on page 39*.
	▶II Depending on operating mode, Play / Pause button to start / stop playback or button to select a menu item.
	■ Stop button to stop playback

	⟲ Selection button. Press the button repeatedly to activate a playback mode. The active mode and the title of the current track will appear on the display: ■ Normal *'N'*. All tracks of the selected audio source are played in succession according to the MP3 file date. The prerequisite for this is that a subdirectory with the desired titles has been created on the data medium. ■ Random *'R'*. All tracks of the selected audio source are played in random order. ■ Intro *'I'*. The first ten seconds of each track of the selected audio source will be played. ■ All *'A'*. All tracks in endless loop, like Normal mode. ■ Single *'1'*. Only the selected track is repeated in a loop. ■ Folder *'F'*. All tracks of a specific folder of the selected audio source are being played.
	▶▶ Depending on operating mode, Skip forward (to the next track) or switch to the next menu option. Keep this button pressed to increase the volume of the internal media player.
	◀◀ Depending on operating mode, Skip backwards (to the previous track) or switch to the previous menu option. Keep this button pressed to decrease the volume of the internal media player. We highly recommend to keep this volume at maximum value and adjust the volume with the controller *[LEVEL]* (24).

5	*[LEVEL]* Gain control for channel 3. Use this control to adjust the level of the input signal in Channel 3.
6	*[ON | LIMIT]* Indicator LED (green). This LED lights solid in normal operation and flickers when the box is overdriven. In this case, turn the gain control of the active channel down to reduce the level of the input signal.
7	*[MASTER]* Volume control. Use this control to adjust the overall volume of the device (sum of all input channels).
8	*[EFFECT]* Effects control. Use this control to adjust the amount of built-in Delay effect on the overall volume for all channels.
9	*[EQ LOW | HIGH]* Equalizer. Controller for adjusting the high and low frequencies in a range of *[–15]* … *[+15]*.
10	*[CH3]* Signal input for channel 3, designed as XLR / 1/4" jack combo socket, beneath toggle switch for LINE and MIC input signal level.

11	*[CH2]* Signal input for channel 2, designed as XLR / 1/4" combo socket, beneath switch between LINE and MIC input signal level.
12	*[CH1]* RCA input sockets to connect an external audio device to channel 1.
13	*[LINE IN]* 3.5 mm input socket to connect an external audio device to channel 1.
14	*[LEVEL]* Gain control for channel 2. Use this control to adjust the level of the input signal in Channel 2.
15	*[LEVEL]* Gain control for channel 1. Use this control to adjust the level of the input signal in Channel 1.
16	*[CHI | MP]* Channel 1 input signal switch: external device via RCA sockets / 3.5 mm jack or built-in media player.

5.2.2 Partial view C

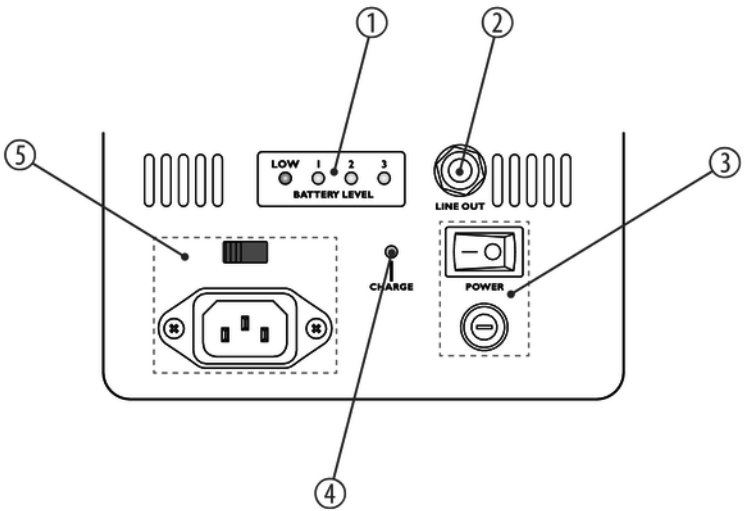

1	*[BATTERY LEVEL]* Charging indicator. If only the red LED *[LOW]* lights, the remaining battery capacity is low (<20 %). Then connect the device to the mains power to charge the batteries. During charging, the red LED *[LOW]* lights and the green LEDs *[1]* … *[3]* light up one by one depending on charging level (*[1]* = 40 %, *[2]* = 60 %, *[3]* = 100 %). When the batteries are completely charged, the red LED *[LOW]* turns off and the three green LEDs light. When capacity decreases, the green LEDs turn off one by one. Please refer also to the instructions in section *Chapter 4.1 'Speaker' on page 19*.
2	*[LINE OUT]* Line output (1/4" socket) to connect an amplifier, a PA or an additional speaker.
3	*[POWER]* On / off switch and fuse holder.

4	*[CHARGE]* This LED lights green during charging. Once the installed battery pack is fully charged, the LED turns off.
5	IEC chassis plug for power connection and mains voltage selector switch. Once the unit is connected to the mains, the built-in rechargeable batteries are being charged even when the power is off.

5.2.3 Partial view D

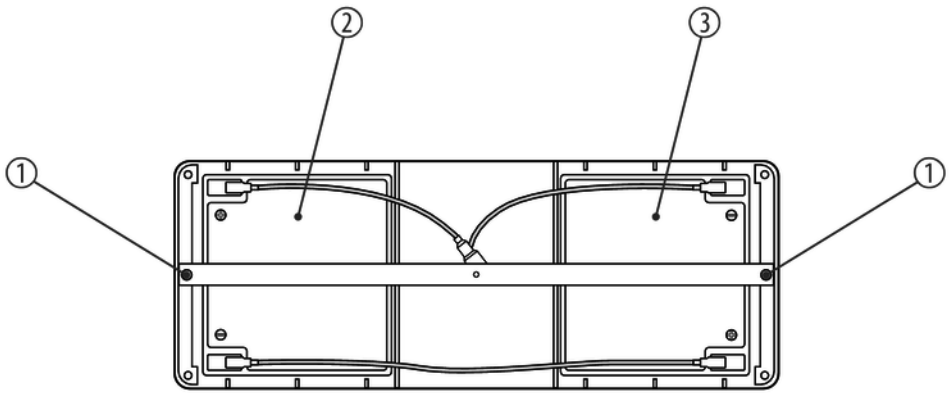

1	Mounting screws of the fixing plate
2, 3	VRLA batteries 1 and 2 Observe the correct polarity when wiring the batteries. Connect the red cable to the positive pole of battery 1 and the black cable to the negative pole of battery 2. Use the blue cable to connect the negative pole of battery 1 to the positive pole of battery 2.

5.2.4 Display

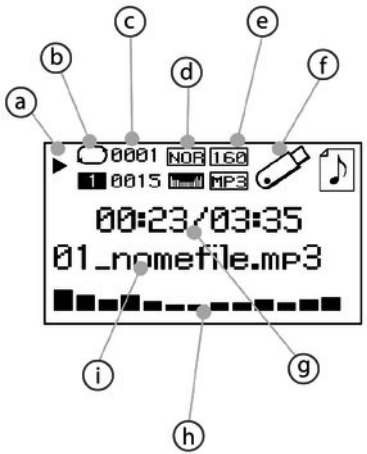

a	Play/Pause.
b	Endless loop.
c	Number of the currently playing track and number of tracks in the current folder.
d	Selected EQ setting.
e	Bit rate and file type of the currently playing track.
f	Symbol for the selected data source.
g	Elapsed time / total time of the currently playing track.
h	Frequency spectrum bar graph.
i	File name of the currently playing track.

5.2.5 Playback via Bluetooth

Establishing connection to Bluetooth device

Follow the instructions given in the manual of the Bluetooth device and turn it on. Place it near the device.

Press *[MODE]* and select the Bluetooth interface as the source for playback. After a few seconds your Bluetooth device is detected. The display shows the message *'BT Connected'*. If it does not work automatically, press ▶II and start synchronisation from the Bluetooth device.

Bluetooth menu

Hold *[MODE]* pressed for a few seconds to open the Bluetooth menu.

To navigate within the menu, use *[PREV / NEXT]*. To select an option, use *[PLAY / PAUSE]*.

The menu offers the following options:

- *'Recently reconnection'* – re-connect to the last used Bluetooth device.
- *'EQ'*
  - *'Normal'* – Normal
  - *'Pop'* – Pop music
  - *'Rock'* – Rock music
  - *'Jazz'* – Jazz

  - *'Classic'* – Classic music
  - *'County'* – Country music
  - *'Lowbass'* – Bass boost
- *'Deleted paired info'* – erases all information on last link with a Bluetooth device. Try this option to solve problems establishing a Bluetooth connection.
- *'Device Information'* – shows information about the name and address of the Bluetooth interface of the device on the display.
- *'Exit'* – to exit the menu.

5.3 Remote control

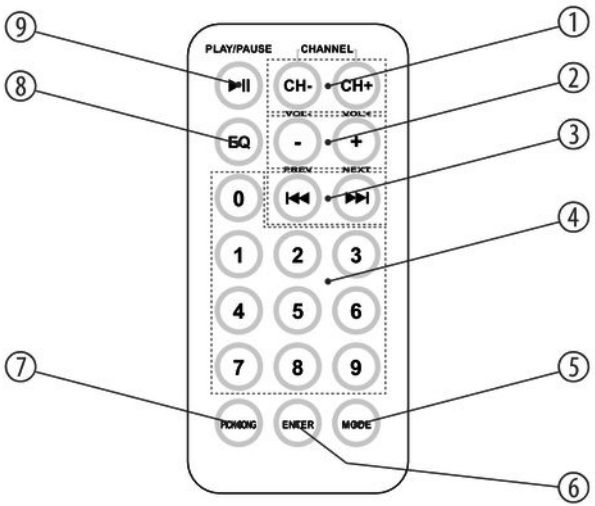

1	*[CHANNEL]* No function.
2	*[VOL– / VOL+]* To decrease or increase the volume.
3	*[PREV / NEXT]* Forward (skip to the next track) or backward (skip to the previous track).
4	Numeric keypad for direct access to tracks.
5	*[MODE]* Selection button. Press this button to select an audio source: SD card, USB input or Bluetooth port. The active source is shown on the display. For setting up and using the Bluetooth interface note .

6	*[ENTER]* This button opens a menu with the following options: ■ *'EQ'* – selects an equalizer setting, corresponds to the key *[EQ]* on the remote. ■ *'PLAY MODE'* – selects a play mode, corresponds to the key ⟲ on the unit. ■ *'CHANGE DEVICE'* – selects an audio source, corresponds to the key *[MODE]* on the remote. ■ *'EXIT'* – to exit the selection menu. To navigate within the selection menu use *[PREV / NEXT]*. To select an option use *[PLAY/PAUSE]*.
7	*[PICK SONG]* No function.

8	*[EQ]* Selects an EQ setting: ■ *'NOR'* – Normal ■ *'POP'* – Pop music ■ *'ROCK'* – Rock music ■ *'JAZZ'* – Jazz ■ *'CLAS'* – Classic music ■ *'COU'* – Country music ■ *'BAS'* – Bass boost
9	*[PLAY/PAUSE]* Play / pause button to start / stop playback.

5.4 UHF handheld transmitter

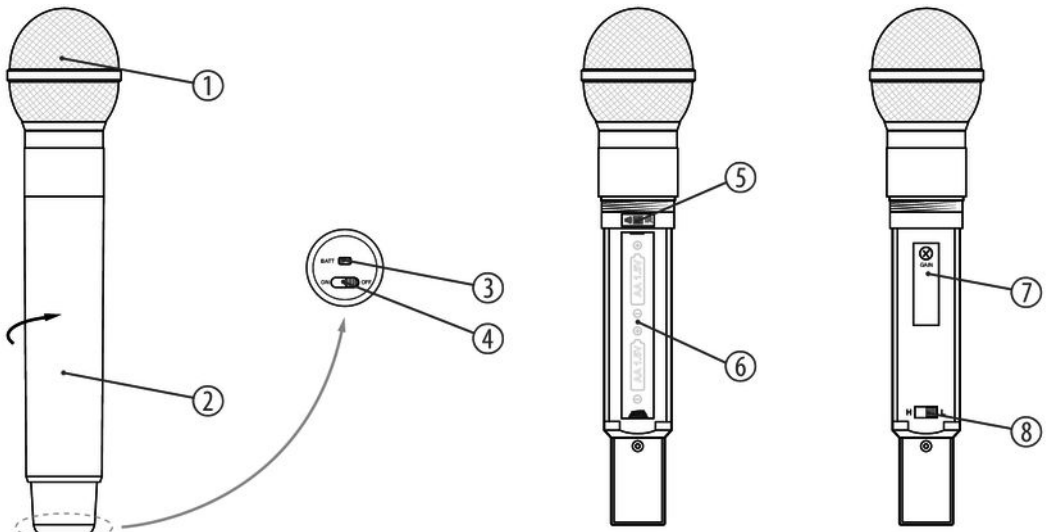

1	Microphone head grill to prevent damage and to reduce wind and breath noise.
2	Lower housing part. Unscrew to open.
3	*[BATT]* This LED shows the state of the batteries. When the UHF handheld transmitter is turned on and the capacity of the battery is sufficient, the LED lights green. When the batteries are exhausted, the LED lights red.
4	*[ON/OFF]* Slide switch to turn the UHF handheld transmitter on and off.
5	Infrared sensor for receiving the channel setting from the device to the UHF handheld transmitter. The sensor is accessible after removal of the lower housing part. After each change, transfer the channel setting from the device to the UHF handheld transmitter. Place the UHF handheld transmitter as close as possible to the device and then press *[ASC]*. The LED *[RF]* LED lights up when the transmission was successful.
6	Battery compartment for 2 AA cells (LR6, 1.5 V) or appropriate rechargeable batteries.

7	*[GAIN]* Control to adjust the sensitivity of the UHF handheld transmitter.
8	*[H/L]* Switch for selecting the transmission level. In 'L' position, a low level is used to save the batteries. As a result, the range is reduced to about 10 m. In 'H' position, a high level is used for an expanded transmission range (about 30 m). This reduces battery life.

6 Technical specifications

6.1 Speaker

Speaker	Two-way system with 1" compression driver and 10" woofer	
Input connections	Microphone/Line	2 × XLR/1/4" combo socket
	Line (stereo)	1 × 3.5 mm jack socket
		2 × RCA sockets for additional signal input, for CD players or similar devices with line out signal
	USB port	USB A
	Power supply	IEC chassis plug C14
Output connector	Line out	1 × 1/4" phone socket
Output power	120 W (mains operation)	
	80 W (battery operation)	

Frequency range	55 Hz … 18 kHz, –3 dB	
Power consumption	43 W	
Supply voltage	110 V~, 60 Hz / 230 V ~, 50 Hz	
	2 × 12 V lead-gel rechargeable batteries (VRLA batteries, 5 Ah each), maintenance-free Recommended types: ■ Ritar RT1250 ■ Fiamm FG20451	
Fuse	110 V: 5 mm × 20 mm, 2 A, 250 V, slow-blow 230 V: 5 mm × 20 mm, 1 A, 250 V, slow-blow	
Operating time per battery charge	Music: approx. 4 h	
	Speech: approx. 6 h	
Charging time	10 h … 12 h	
Battery remote control	Battery type	Lithium button cell, 3 V, CR 2025
Dimensions (W × H × D)	360 mm × 290 mm × 567 mm	

Weight	19 kg	
Ambient conditions	Temperature range	0 °C…40 °C
	Relative humidity	50 %, non-condensing

Further information

Incl. player	Yes
Incl. microphone	Yes
Incl. radio system	Yes
Incl. subwoofer	No
Incl. cover	No (optional, item no. 382254)

6.2 UHF receiver

Carrier frequency	UHF band (863 MHz … 865 MHz)
NF frequency response	60 Hz … 16 kHz, –3 dB
Modulation type	Frequency modulation (FM)
Signal-to-noise ratio	> 100 dB
Transmission power	< 10 mW
THD	< 0.1 %

6.3 UHF handheld transmitter

Frequency range	863 MHz … 865 MHz
Maximum transmission power	10 mW
Maximum input level	–10 dBV

Input impedance (antenna)		50 Ω
Range (free field)		Up to 30 m
Battery	Battery type	LR6 AA or rechargeable Ni-MH batteries (nickel metal hydride)
	Voltage	1.5 V
Dimensions (W × H, without antenna)		54 mm × 250 mm
Dimensions antenna (W × H)		13 mm × 250 mm
Weight		270 g
Ambient conditions	Temperature range	0 °C…40 °C
	Relative humidity	50 %, non-condensing

7 Plug and connection assignment

Introduction

This chapter will help you select the right cables and plugs to connect your valuable equipment in such a way that a perfect sound experience is ensured.

Please note these advices, because especially in 'Sound & Light' caution is indicated: Even if a plug fits into the socket, an incorrect connection may result in a destroyed power amp, a short circuit or 'just' in poor transmission quality!

Balanced and unbalanced transmission

Unbalanced transmission is mainly used in semi-professional environment and in hifi use. Instrument cables with two conductors (one core plus shielding) are typical representatives of the unbalanced transmission. One conductor is ground and shielding while the signal is transmitted through the core.

Unbalanced transmission is susceptible to electromagnetic interference, especially at low levels, such as microphone signals and when using long cables.

In a professional environment, therefore, the balanced transmission is preferred, because this enables an undisturbed transmission of signals over long distances. In addition to the conductors 'Ground' and 'Signal', in a balanced transmission a second core is added. This also transfers the signal, but phase-shifted by 180°.

Since the interference affects both cores equally, by subtracting the phase-shifted signals, the interfering signal is completely neutralized. The result is a pure signal without any noise interference.

1/4" TS phone plug (mono, unbalanced)

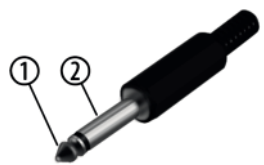

1	Signal
2	Ground, shielding

1/4" TRS phone plug (mono, balanced)

1	Signal (in phase, +)
2	Signal (out of phase, –)
3	Ground

Three-pole 1/8" mini phone jack (stereo, unbalanced)

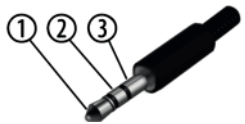

1	Signal (left)
2	Signal (right)
3	Ground, shielding

XLR plug (balanced)

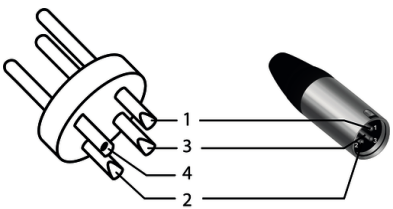

1	Ground, shielding
2	Signal (in phase, +)
3	Signal (out of phase, –)
4	Shielding on plug housing (option)

RCA connection

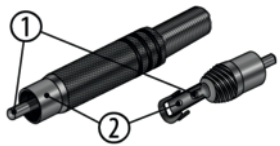

Drawing and table indicate the pin assignment of an RCA plug.

1	Signal
2	Ground, shielding

8 Cleaning

Device components

Clean the device components that are accessible from the outside regularly. The cleaning frequency depends on the operating environment: damp, smoky or particularly dirty environments can cause greater accumulation of dirt on the device components.

- Clean with a dry soft cloth.
- Stubborn dirt can be removed with a slightly dampened cloth.
- Never use solvents or alcohol for cleaning.

9 Protecting the environment

Disposal of the packaging material

For the transport and protective packaging, environmentally friendly materials have been chosen that can be supplied to normal recycling.

Ensure that plastic bags, packaging, etc. are properly disposed of.

Do not just dispose these materials with your normal household waste, but make sure that they are fed to a recovery. Please follow the notes and markings on the packaging.

Disposal of batteries

Batteries must not be disposed of as domestic waste or thrown into fire. Dispose of the batteries according to national or local regulations regarding hazardous waste. To protect the environment, dispose of empty batteries at your retail store or at appropriate collection sites.

Disposal of your old device

This product is subject to the European Waste Electrical and Electronic Equipment Directive (WEEE) in its currently valid version. Do not dispose with your normal household waste.

Dispose this device through an approved waste disposal firm or through your local waste facility. When discarding the device, comply with the rules and regulations that apply in your country. If in doubt, consult your local waste disposal facility.

Musikhaus Thomann · Hans-Thomann-Straße 1 · 96138 Burgebrach · Germany · www.thomann.de