VARYTEC

LED Pad Bar
Compact ST RGB

User manual

LED lighting set

Musikhaus Thomann
Thomann GmbH
Hans-Thomann-Straße 1
96138 Burgebrach
Germany
Telephone: +49 (0) 9546 9223-0
E-mail: info@thomann.de
Internet: www.thomann.de

19.09.2019, ID: 390846 (V2)

Table of contents

1 General information **5**
1.1 Further information 6
1.2 Notational conventions 7
1.3 Symbols and signal words 7
2 Safety instructions **10**
3 Features **16**
4 Installation **18**
5 Starting up **22**
6 Connections and controls **25**
7 Operating **31**
7.1 Operating on the unit 31
7.2 Foot switch control 38
7.3 Menu overview 39
7.4 Functions in 3-channel DMX mode 42
7.5 Functions in 5-channel DMX mode 48

7.6 Functions in 24-channel DMX mode 49

8 Technical specifications 52

9 Plug and connection assignments 55

10 Troubleshooting 56

11 Cleaning 59

12 Protecting the environment 60

1 General information

This user manual contains important information on the safe operation of the device. Read and follow all safety notes and all instructions. Save this manual for future reference. Make sure that it is available to all persons using this device. If you sell the device to another user, be sure that they also receive this manual.

Our products and user manuals are subject to a process of continuous development. We therefore reserve the right to make changes without notice. Please refer to the latest version of the user manual which is ready for download under *www.thomann.de*.

1.1 Further information

On our website (*www.thomann.de)* you will find lots of further information and details on the following points:

Download	This manual is also available as PDF file for you to download.
Keyword search	Use the search function in the electronic version to find the topics of interest for you quickly.
Online guides	Our online guides provide detailed information on technical basics and terms.
Personal consultation	For personal consultation please contact our technical hotline.
Service	If you have any problems with the device the customer service will gladly assist you.

1.2 Notational conventions

This manual uses the following notational conventions:

Letterings

The letterings for connectors and controls are marked by square brackets and italics.

Examples: *[VOLUME]* control, *[Mono]* button.

Displays

Texts and values displayed on the device are marked by quotation marks and italics.

Examples: *'24ch'*, *'OFF'*.

1.3 Symbols and signal words

In this section you will find an overview of the meaning of symbols and signal words that are used in this manual.

Signal word	Meaning
DANGER!	This combination of symbol and signal word indicates an immediate dangerous situation that will result in death or serious injury if it is not avoided.
WARNING!	This combination of symbol and signal word indicates a possible dangerous situation that can result in death or serious injury if it is not avoided.
NOTICE!	This combination of symbol and signal word indicates a possible dangerous situation that can result in material and environmental damage if it is not avoided.

Warning signs	Type of danger
	Warning – high-voltage.
	Warning – dangerous optical radiation.

Warning signs	Type of danger
	Warning – danger zone.

2 Safety instructions

Intended use

This device is intended for use as an electronic lighting effect by means of LED technology. The device is designed for professional use and is not suitable for use in households. Use the device only as described in this user manual. Any other use or use under other operating conditions is considered to be improper and may result in personal injury or property damage. No liability will be assumed for damages resulting from improper use.

This device may be used only by persons with sufficient physical, sensorial, and intellectual abilities and having corresponding knowledge and experience. Other persons may use this device only if they are supervised or instructed by a person who is responsible for their safety.

Extend the life of the device by regular breaks in operation and avoid switching it on and off frequently. This device is not suitable for continuous use.

Safety

DANGER!

Danger for children

Ensure that plastic bags, packaging, etc. are disposed of properly and are not within reach of babies and young children. Choking hazard!

Ensure that children do not detach any small parts (e.g. knobs or the like) from the unit. They could swallow the pieces and choke!

Never let children unattended use electrical devices.

DANGER!

Electric shock caused by high voltages inside

Within the device there are areas where high voltages may be present. Never remove any covers.

There are no user-serviceable parts inside.

Do not use the device if covers, protectors or optical components are missing or damaged.

DANGER!

Electric shock caused by short-circuit

Always use proper ready-made insulated mains cabling (power cord) with a protective contact plug. Do not modify the mains cable or the plug. Failure to do so could result in electric shock/death or fire. If in doubt, seek advice from a registered electrician.

WARNING!

Eye damage caused by high light intensity

Never look directly into the light source.

WARNING!

Risk of epileptic shock

Strobe lighting can trigger seizures in photosensitive epilepsy. Sensitive persons should avoid looking at strobe lights.

NOTICE!

Risk of fire

Do not block areas of ventilation. Do not install the device near any direct heat source. Keep the device away from naked flames.

NOTICE!

Operating conditions

This device has been designed for indoor use only. To prevent damage, never expose the device to any liquid or moisture. Avoid direct sunlight, heavy dirt, and strong vibrations.

Only operate the device within the ambient conditions specified in the chapter 'Technical specifications' of this user manual. Avoid heavy temperature fluctuations and do not switch the device on immediately after it was exposed to temperature fluctuations (for example after transport at low outside temperatures).

Dust and dirt inside can damage the unit. When operated in harmful ambient conditions (dust, smoke, nicotine, fog, etc.), the unit should be maintained by qualified service personnel at regular intervals to prevent overheating and other malfunction.

NOTICE!

Power supply

Before connecting the device, ensure that the input voltage (AC outlet) matches the voltage rating of the device and that the AC outlet is protected by a residual current circuit breaker. Failure to do so could result in damage to the device and possibly injure the user.

Unplug the device before electrical storms occur and when it is unused for long periods of time to reduce the risk of electric shock or fire.

NOTICE!

Possible damage due to installation of a wrong fuse

The use of different types of fuses can cause serious damage to the unit. Fire hazard!

Only fuses of the same type may be used.

3 Features

The LED lighting set is particularly suitable for lighting tasks which require rapid setup and dismantling, especially for small to mid-sized dance events and bands.

Special features of the device:

- four LED spotlights with each three 3-in-1 LEDs (RGB, 6 watt)
- four white strobe LEDs (1 watt)
- Control options:
  - DMX-512
  - Buttons and display on the unit
  - Wireless foot switch (included)
- Automatic mode:
  - 17 preprogrammed coloured LED programmes
  - Ten preprogrammed strobe LED programmes
  - Three preprogrammed show programmes
- Sound control
- Master / Slave mode

- easy transport, easy mounting
- Gig bag included

4 Installation

Unpack and check carefully there is no transportation damage before using the unit. Keep the equipment packaging. To fully protect the product against vibration, dust and moisture during transportation or storage use the original packaging or your own packaging material suitable for transport or storage, respectively.

NOTICE!

Risk of overheating

The distance between light output and the illuminated surface must be more than 1.5 m (19.7in).

Provide sufficient ventilation.

The ambient temperature must always be below 40 °C (104 °F).

NOTICE!

Use of stands

When mounting the device onto a stand, ensure that the stand is in a safe and stable position and that the weight of the device does not exceed the maximum permissible load capacity of the stand.

NOTICE!

Possible data transmission errors

For error-free operation make use of dedicated DMX cables and do not use ordinary microphone cables.

Never connect the DMX input or output to audio devices such as mixers or amplifiers.

Please note that this device must not be connected to a dimmer.

Pre-mounted spots

The four spots are pre-mounted on the T-bar and factory-wired.

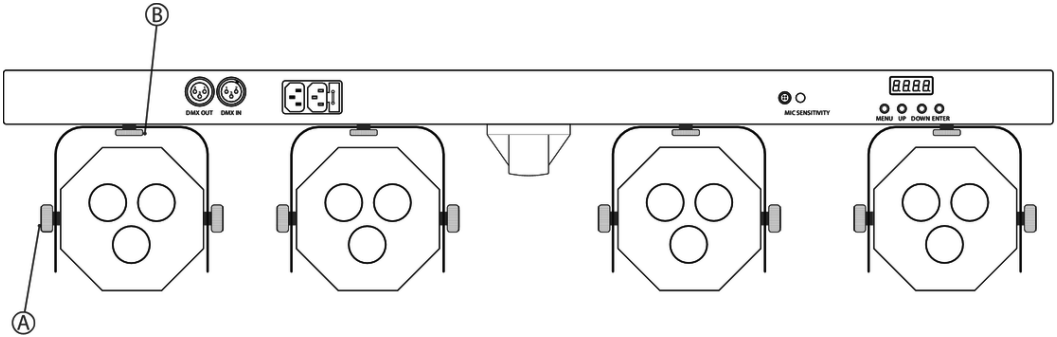

A	Locking screw for fixing the inclination angle.
B	Locking screws for fixing the spots on the T-bar and the horizontal orientation (dispersion direction).

5 Starting up

Create all connections while the device is off. Use the shortest possible high-quality cables for all connections. Take care when running the cables to prevent tripping hazards.

Connections in DMX mode

Connect the DMX input of the device to the DMX output of a DMX controller or another DMX device. Connect the output of the first DMX device to the input of the second one, and so on to form a daisy chain. Always ensure that the output of the last DMX device in the daisy chain is terminated with a resistor (110 Ω, ¼ W).

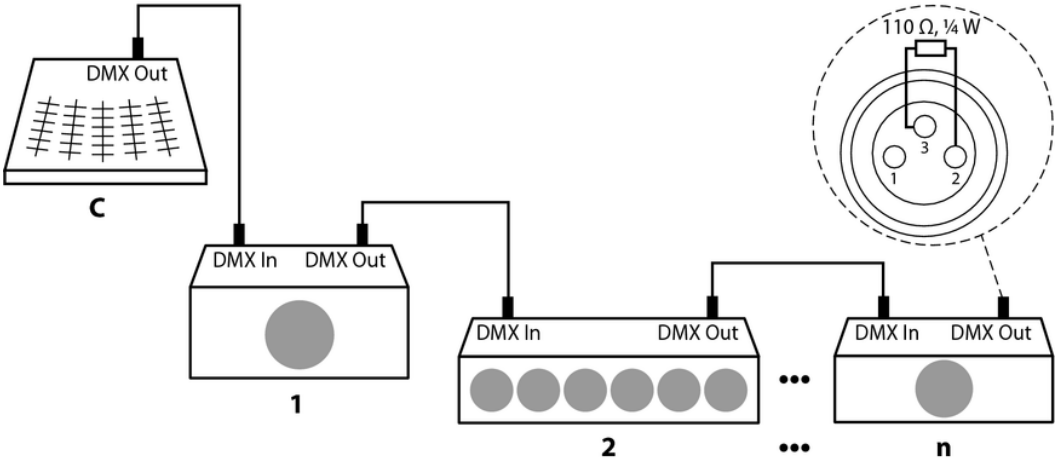

Connections in master/slave mode

When you configure a group of devices in master/slave mode, the first unit will control the other units for an automatic, sound-activated, synchronized show. This function is ideal when you want to start a show immediately. Connect the DMX output of the master device to the DMX input of the first slave device. Then connect the DMX output of the first slave device to the DMX input of the second slave device and so on.

6 Connections and controls

Front view

1	Strobe LEDs

Rear view

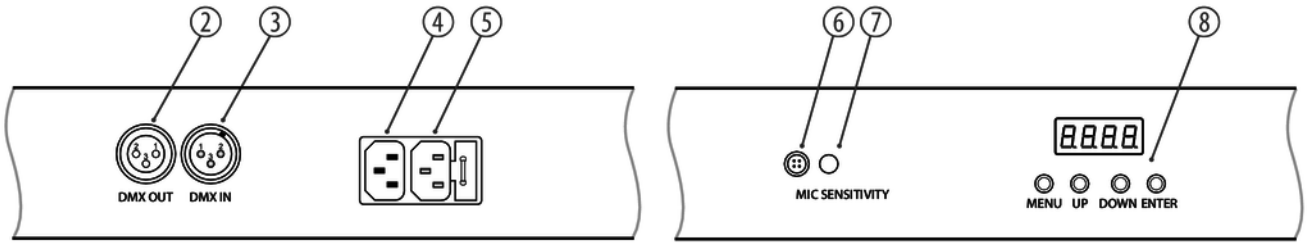

2	*[DMX OUT]* DMX output
3	*[DMX IN]* DMX input
4	IEC chassis socket for the power supply cable to the next unit.
5	IEC chassis plug for operating voltage supply with fuse holder.
6	Microphone
7	Controller for the sensitivity of the built-in microphone.
8	Display with function buttons.
	[MENU] Activates the main menu and toggles between menu items. Closes an opened submenu.
	[UP] Increases the displayed value by one.

	[DOWN] Decreases the displayed value by one.
	[ENTER] Selects an option of the respective operating mode, confirms the set value.

Foot switch

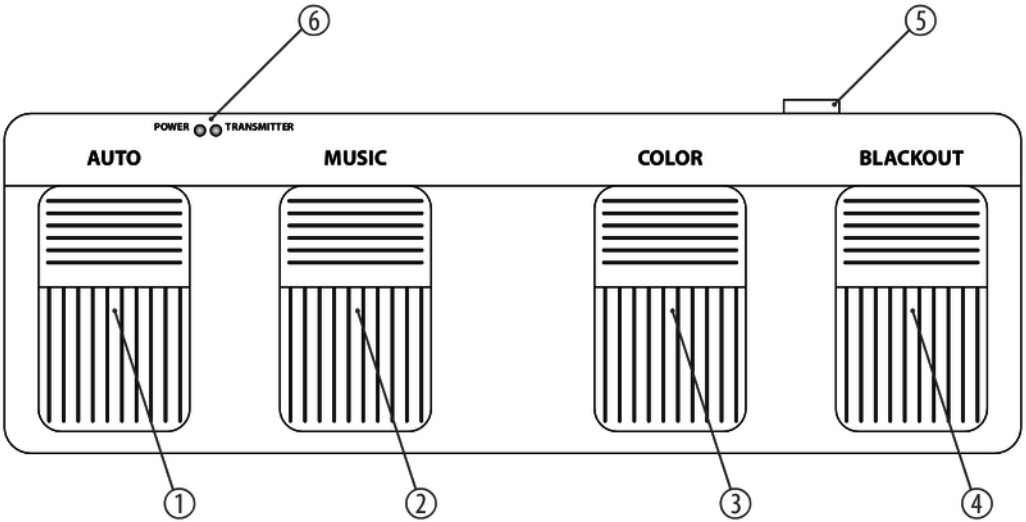

1	*[AUTO]* Activates the ‘Automatic’ mode (playback of preprogrammed automatic shows).
2	*[MUSIC]* Activates the ‘Sound-control’ mode (playback of sound-controlled automatic shows).
3	*[COLOUR]* Starts the automatic colour change or stops it again.
4	*[BLACKOUT]* Blackouts all LEDs or turns them back on again.
5	Main switch. Turns the device on and off.
6	*[POWER]* Status LED lights up when the wireless footswitch is turned on. *[TRANSMITTER]* Status LED lights up when the wireless footswitch is connected to the LED bar.

7 Operating

7.1 Operating on the unit

Connect the device to the power supply to start operation. All functions of the device are controlled via the buttons and display on the unit as well as the supplied wireless foot switch.

Press *[MENU]* to open the main menu. Use *[UP]* and *[DOWN]* to select a submenu or to change the respectively indicated value. When the display shows the desired value press *[ENTER]*.

Operating mode 'Automatic'

In automatic mode, you have the option to activate one of 17 coloured LED shows, one of ten available stroboscope LED shows and one of three show programmes. This setting is only relevant if the device is not controlled via DMX.

Press *[MENU]* repeatedly until the display shows *'Aut'*.

Use *[UP]* or *[DOWN]* to select the submenu *'AutP'*. Confirm with *[ENTER]* and use *[UP]* or *[DOWN]* one of 17 LED shows *'AP01'* … *'AP17'*. Confirm with *[ENTER]*. The display shows *'Sxx'*. Use *[UP]* or *[DOWN]* to set the programme speed in a range from *'S01'* (slow) to *'S99'* (fast). Confirm again with *[ENTER]* to apply the setting.

or

Use *[UP]* or *[DOWN]* to select the submenu *'AutF'*. Confirm with *[ENTER]* and use *[UP]* or *[DOWN]* one of ten stroboscope shows *'AF01'* … *'AF10'*. Confirm with *[ENTER]*. The display shows *'Sxx'*. Use *[UP]* or *[DOWN]* to set the programme speed in a range from *'S01'* (slow) to *'S99'* (fast). Confirm again with *[ENTER]* to apply the setting.

or

Use *[UP]* or *[DOWN]* to select the submenu *'AutM'*. Confirm with *[ENTER]* and use *[UP]* or *[DOWN]* one of three preprogrammed shows *'AM01'* … *'AM03'*. Confirm with *[ENTER]*. The display shows *'Sxx'*. Use *[UP]* or *[DOWN]* to set the programme speed in a range from *'S01'* (slow) to *'S99'* (fast). Confirm again with *[ENTER]* to apply the setting.

Operating mode 'Sound'

In sound mode, you have the option to activate one of twelve coloured LED shows, one of ten available stroboscope LED shows and one of three show programmes. This setting is only relevant if the device is not controlled via DMX. The programme control is based on the signals received via the built-in microphone. The sensitivity of the built-in microphone is set manually via the controller on the device.

Press *[MENU]* repeatedly until the display shows *'Sou'*.

Use *[UP]* or *[DOWN]* to select the submenu *'SouP'*. Confirm with *[ENTER]* and use *[UP]* or *[DOWN]* one of 12 LED shows *'SP01'* … *'SP17'*. Confirm with *[ENTER]*. The display shows *'Sxx'*. Use *[UP]* or *[DOWN]* to set the programme speed in a range from *'S01'* (slow) to *'S99'* (fast). Confirm again with *[ENTER]* to apply the setting.

Use *[UP]* or *[DOWN]* to select the submenu *'SouF'*. Confirm with *[ENTER]* and use *[UP]* or *[DOWN]* one of ten stroboscope shows *'SF01'* … *'SF10'*. Confirm with *[ENTER]*. The display shows *'Sxx'*. Use *[UP]* or *[DOWN]* to set the programme speed in a range from *'S01'* (slow) to *'S99'* (fast). Confirm again with *[ENTER]* to apply the setting.

Use *[UP]* or *[DOWN]* to select the submenu *'SouM'*. Confirm with *[ENTER]* and use *[UP]* or *[DOWN]* one of three preprogrammed shows *'SM01'* … *'SM03'*. Confirm with *[ENTER]*. The display shows *'Sxx'*. Use *[UP]* or *[DOWN]* to set the programme speed in a range from *'S01'* (slow) to *'S99'* (fast). Confirm again with *[ENTER]* to apply the setting.

Constant colour pattern

In this mode, you can manually set a constant colour pattern for all LEDs. This setting is only relevant if the device is not controlled via DMX.

Press *[MENU]* repeatedly until the display shows *'CoLo'*.

Use *[UP]* or *[DOWN]* to select the submenu *'r.xxx'*. Confirm with *[ENTER]* and use *[UP]* or *[DOWN]* to adjust the intensity of the colour red for all LEDs in a range from *'r.000'* … *'r.255'*. Confirm with *[ENTER]*. The display shows *'S.xxx'*. Use *[UP]* or *[DOWN]* to set the strobe speed in a range from *'S.001'* (slow) to *'S.099'* (fast). Confirm again with *[ENTER]* to apply the setting.

Use *[UP]* or *[DOWN]* to select the submenu *'G.xxx'*. Confirm with *[ENTER]* and use *[UP]* or *[DOWN]* to adjust the intensity of the colour green for all LEDs in a range from *'G.000'* … *'G.255'*. Confirm with *[ENTER]*. The display shows *'S.xxx'*. Use *[UP]* or *[DOWN]* to set the strobe speed in a range from *'S.001'* (slow) to *'S.099'* (fast). Confirm again with *[ENTER]* to apply the setting.

Use *[UP]* or *[DOWN]* to select the submenu *'b.xxx'*. Confirm with *[ENTER]* and use *[UP]* or *[DOWN]* to adjust the intensity of the colour blue for all LEDs in a range from *'b.000'* … *'b.255'*. Confirm with *[ENTER]*. The display shows *'S.xxx'*. Use *[UP]* or *[DOWN]* to set the strobe speed in a range from *'S.001'* (slow) to *'S.099'* (fast). Confirm again with *[ENTER]* to apply the setting.

Synchronous automatic mode, synchronous sound mode

Depending on the selection, the unit operates in synchronous automatic mode or in synchronous sound mode. This setting is only relevant if the device is not controlled via DMX.

Press *[MENU]* repeatedly until the display shows *'SYN'*.

Use *[UP]* or *[DOWN]* to select the submenu *'SY-A'* and confirm with *[ENTER]* to enable the synchronous auto mode. The display shows *'S.xxx'*. Use *[UP]* or *[DOWN]* to set the programme speed in a range from *'S01'* (slow) to *'S99'* (fast). Confirm again with *[ENTER]* to apply the setting.

Use *[UP]* or *[DOWN]* to select the option *'SY-N'* and confirm with *[ENTER]* to enable the synchronous sound mode.

DMX mode

This setting is only relevant when the device is controlled via DMX.

Press *[MENU]* repeatedly until the display shows *'dMH'*. Confirm with *[ENTER]* and use *[UP]* or *[DOWN]* to select the desired DMX mode.

Mode	Display	Highest possible DMX address
3-channel	*'03Ch'*	510
5-channel	*'05Ch'*	508
24-channel	*'24Ch'*	489

Confirm with *[ENTER]*. Now you can set the number of the first DMX channel to be used by the device (DMX address). Use *[UP]* and *[DOWN]* to select a value between *'d001'* … *'d512'* and confirm with *[ENTER]*.

Operating mode 'Slave'

This setting is only relevant if the device is working as Slave in a Master / Slave configuration and is not controlled via DMX.

Press *[MENU]* repeatedly until the display shows *'SLA'*. Use *[UP]* or *[DOWN]* to select the option *'S001'* to enable the Slave mode.

Confirm with *[ENTER]*. Now you can set the Salve address. Use *[UP]* and *[DOWN]* to select a value between *'001'* … *'512'* and confirm with *[ENTER]*.

Operating mode 'Master'

To activate the 'Master' mode in synchronous mode, proceed as follows:

Press *[MENU]* repeatedly until the display shows *'SYS'*. Use *[UP]* or *[DOWN]* to select the option *'M-En'* and confirm with *[ENTER]*. Use *[UP]* or *[DOWN]* to select the option *'On'* to enable the operation mode. Confirm again with *[ENTER]* to apply the setting.

Self test

To initiate the self-test function, proceed as follows:

Press *[MENU]* repeatedly until the display shows *'SYN'*. Use *[UP]* or *[DOWN]* to select the option *'tESt'* and confirm with *[ENTER]* to initiate a self-test.

Reset to factory defaults

Proceed as follows to reset the device to factory defaults:

Press *[MENU]* repeatedly until the display shows *'SYN'*. Use *[UP]* or *[DOWN]* to select the option *'tESt'* and confirm with *[ENTER]* to reset the device to the factory default settings.

7.2 Foot switch control

Proceed as follows to enable foot switch control:

Press *[MENU]* repeatedly until the display shows *'SYS'*. Use *[UP]* or *[DOWN]* to select the option *'U-En'* and confirm with *[ENTER]*. Use *[UP]* or *[DOWN]* to select the option *'On'* to enable foot switch control. Confirm again with *[ENTER]* to apply the setting.

7.3 Menu overview

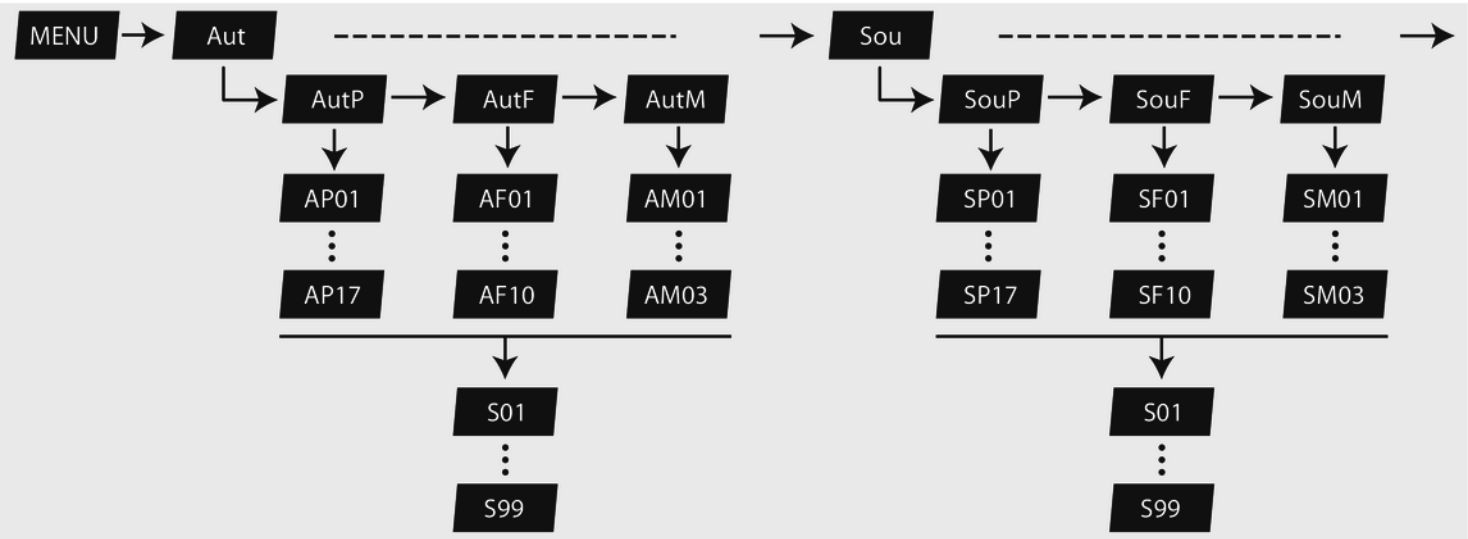
MENU
Aut
AutP
AutF
AutM
AP01
AP17
AF01
AF10
AM01
AM03
S01
S99
Sou
SouP
SouF
SouM
SP01
SP17
SF01
SF10
SM01
SM03
S01
S99

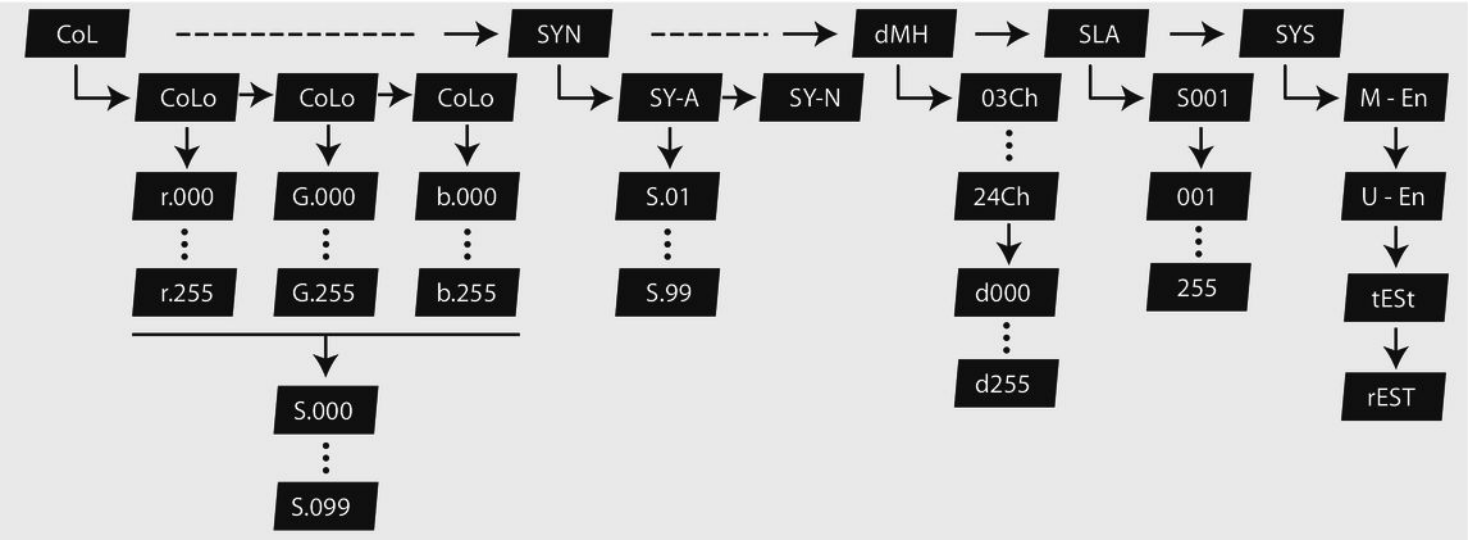
CoL
SYN
dMH
SLA
SYS
CoLo
CoLo
CoLo
r.000
r.255
G.000
G.255
b.000
b.255
S.000
S.099
SY-A
SY-N
S.01
S.99
03Ch
24Ch
d000
d255
S001
001
255
M - En
U - En
tESt
rEST

7.4 Functions in 3-channel DMX mode

Channel	Value	Function
1	0 … 9	No function
	10 … 50	Automatic programmes channel 2
	51 … 90	Stroboscope programmes channel 2
	91 … 130	Shows channel 2
	131 … 170	Automatic programmes sound mode channel 2
	171 … 210	Stroboscope programmes sound mode channel 2
	211… 255	Shows sound mode channel 2
2	Channel 1 = 10 … 50	
	0 … 14	Automatic programme 1
	15 … 29	Automatic programme 2
	30 … 44	Automatic programme 3

Channel	Value	Function
	45 … 59	Automatic programme 4
	60 … 74	Automatic programme 5
	75 … 89	Automatic programme 6
	90 … 104	Automatic programme 7
	105 … 119	Automatic programme 8
	120 … 134	Automatic programme 9
	135 … 149	Automatic programme 10
	150 … 164	Automatic programme 11
	165 … 179	Automatic programme 12
	180 … 194	Automatic programme 13
	195 … 209	Automatic programme 14
	210 … 224	Automatic programme 15

Channel	Value	Function
	225 … 239	Automatic programme 16
	240 … 255	Automatic programme 17
	Channel 1 = 51 … 90	
	0 … 24	Stroboscope programme 1
	25 … 49	Stroboscope programme 2
	50 … 74	Stroboscope programme 3
	75 … 99	Stroboscope programme 4
	100 … 124	Stroboscope programme 5
	125 … 149	Stroboscope programme 6
	150 … 174	Stroboscope programme 7
	175 … 199	Stroboscope programme 8
	200 … 224	Stroboscope programme 9

Channel	Value	Function
	225 … 255	Stroboscope programme 10
	Channel 1 = 91 … 130	
	0 … 99	Show 1
	100 … 199	Show 2
	200 … 255	Show 3
	Channel 1 = 131 … 170	
	0 … 14	Sound mode automatic programme 1
	15 … 29	Sound mode automatic programme 2
	30 … 44	Sound mode automatic programme 3
	45 … 59	Sound mode automatic programme 4
	60 … 74	Sound mode automatic programme 5
	75 … 89	Sound mode automatic programme 6

Channel	Value	Function
	90 … 104	Sound mode automatic programme 7
	105 … 119	Sound mode automatic programme 8
	120 … 134	Sound mode automatic programme 9
	135 … 149	Sound mode automatic programme 10
	150 … 164	Sound mode automatic programme 11
	165 … 179	Sound mode automatic programme 12
	180 … 194	Sound mode automatic programme 13
	195 … 209	Sound mode automatic programme 14
	210 … 224	Sound mode automatic programme 15
	225 … 239	Sound mode automatic programme 16
	240 … 255	Sound mode automatic programme 17
	Channel 1 = 171 … 210	

Channel	Value	Function
	0 … 24	Sound mode stroboscope programme 1
	25 … 49	Sound mode stroboscope programme 2
	50 … 74	Sound mode stroboscope programme 3
	75 … 99	Sound mode stroboscope programme 4
	100 … 124	Sound mode stroboscope programme 5
	125 … 149	Sound mode stroboscope programme 6
	150 … 174	Sound mode stroboscope programme 7
	175 … 199	Sound mode stroboscope programme 8
	200 … 224	Sound mode stroboscope programme 9
	225 … 255	Sound mode stroboscope programme 10
	Channel 1 = 211 … 255	
	0 … 99	Sound mode show 1

Channel	Value	Function
	100 … 199	Sound mode show 2
	200 … 255	Sound mode show 3
3	0 … 255	Programme speed increasing

7.5 Functions in 5-channel DMX mode

Channel	Value	Function
1	0 … 255	Intensity red (0 % to 100 %), for all LEDs together
2	0 … 255	Intensity green (0 % to 100 %), for all LEDs together
3	0 … 255	Intensity blue (0 % to 100 %), for all LEDs together
4	0 … 191	Dimmer (0 % to 100 %)
	192 … 200	Strobe effect sound mode, increasing speed

Channel	Value	Function
	201 … 249	Strobe effect, increasing speed
	250 … 255	All LEDs on
5	0 … 255	Strobe effect, increasing speed

7.6 Functions in 24-channel DMX mode

Channel	Value	Function
1	0 … 255	Intensity red (0 % to 100 %), spot 1
2	0 … 255	Intensity green (0 % to 100 %), spot 1
3	0 … 255	Intensity blue (0 % to 100 %), spot 1
4	0 … 255	Dimmer (0 % to 100 %) spot 1
5	0 … 255	Strobe effect, increasing speed, spot 1

Channel	Value	Function
6	0 … 255	Intensity red (0 % to 100 %), spot 2
7	0 … 255	Intensity green (0 % to 100 %), spot 2
8	0 … 255	Intensity blue (0 % to 100 %), spot 2
9	0 … 255	Dimmer (0 % to 100 %) spot 2
10	0 … 255	Strobe effect, increasing speed, spot 2
11	0 … 255	Intensity red (0 % to 100 %), spot 3
12	0 … 255	Intensity green (0 % to 100 %), spot 3
13	0 … 255	Intensity blue (0 % to 100 %), spot 3
14	0 … 255	Dimmer (0 % to 100 %) spot 3
15	0 … 255	Strobe effect, increasing speed, spot 3
16	0 … 255	Intensity red (0 % to 100 %), spot 4
17	0 … 255	Intensity green (0 % to 100 %), spot 4

Channel	Value	Function
18	0 … 255	Intensity blue (0 % to 100 %), spot 4
19	0 … 255	Dimmer (0 % to 100 %) spot 4
20	0 … 255	Strobe effect, increasing speed, spot 4
21	0 … 255	Strobe effect, increasing speed, stroboscope LED 1
22	0 … 255	Strobe effect, increasing speed, stroboscope LED 2
23	0 … 255	Strobe effect, increasing speed, stroboscope LED 3
24	0 … 255	Strobe effect, increasing speed, stroboscope LED 4

8 Technical specifications

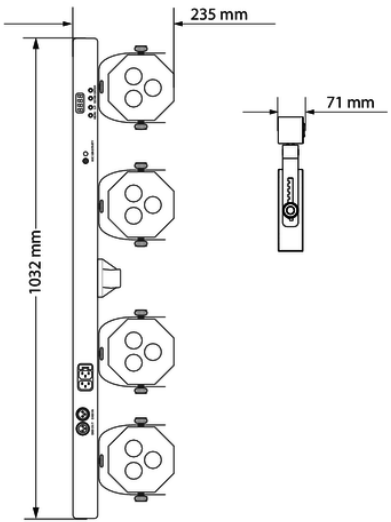

Light source	4 × spot with each 3 × 3-in-1 LEDs, RGB, each 6 W 4 × stroboscope LED, white, each 1 W	
Control	DMX, wireless footswitch, buttons and display on the unit	
Number of DMX channels	3, 5 or 24,	
Input connections	Voltage supply	IEC panel plug
	DMX control	XLR chassis plug, 3-pin
Output connections	Voltage supply	IEC chassis socket
	DMX control	XLR chassis socket, 3-pin
Power consumption	84 W	
Operating supply voltage	100 – 240 V ~ 50/60 Hz	
Fuse	5 mm × 20 mm, 1 A, 250 V, slow-blow	

Battery (Wireless footswitch)	9 V	
Protection class	IP20	
Mounting options	Tripod	
Dimensions (W × H × D)	1032 mm × 235 mm × 71 mm	
Weight	10 kg	
Ambient conditions	Temperature range	0 °C…40 °C
	Relative humidity	50 %, non-condensing

Further information

including spotlight	Yes
including effects units	No
including LED bars	No
including controller	Foot switch
including tripod	Yes
including case / bag	Yes

9 Plug and connection assignments

Introduction

This chapter will help you select the right cables and plugs to connect your valuable equipment so that a perfect light experience is guaranteed.

Please take our tips, because especially in ‘Sound & Light’ caution is indicated: Even if a plug fits into a socket, the result of an incorrect connection may be a destroyed DMX controller, a short circuit or ‘just’ a not working light show!

DMX connections

The unit offers a 3-pin XLR socket for DMX output and a 3-pin XLR plug for DMX input. Please refer to the drawing and table below for the pin assignment of a suitable XLR plug.

Pin	Configuration
1	Ground, shielding
2	Signal inverted (DMX–, ‘cold signal’)
3	Signal (DMX+, ‘hot signal’)

10 Troubleshooting

NOTICE!

Possible data transmission errors

For error-free operation make use of dedicated DMX cables and do not use ordinary microphone cables.

Never connect the DMX input or output to audio devices such as mixers or amplifiers.

In the following we list a few common problems that may occur during operation. We give you some suggestions for easy troubleshooting:

Symptom	Remedy
The unit does not work, no light	Check the mains connection and the fuse.
No response to the DMX controller	1. If the dot behind the first character of the display is flashing in the DMX mode, no DMX signal is received. Make sure that the DMX controller is turned on. Check the DMX ports and cables for proper connection.
	2. If the display does not flash and still no response, check the address settings and the DMX polarity.
	3. Try using another DMX controller.
	4. Check to see if the DMX cables run near or alongside to high voltage cables that may cause damage or interference to DMX interface circuits.
No response to the foot switch	1. Reduce the distance between the unit and the foot switch.
	2. Replace the battery in the foot switch.

If the procedures recommended above do not succeed, please contact our Service Center. You can find the contact information at *www.thomann.de*.

11 Cleaning

Optical lenses

Clean the optical lenses, that are accessible from the outside, regularly in order to optimize the light output. The frequency of cleaning depends on the operating environment: wet, smoky or particularly dirty surroundings can cause more accumulation of dirt on the optics of the device.

- Clean with a soft cloth using our lamp and lens cleaner (item no. 280122).
- Always dry the parts carefully.

12 Protecting the environment

Disposal of the packaging material

For the transport and protective packaging, environmentally friendly materials have been chosen that can be supplied to normal recycling.

Ensure that plastic bags, packaging, etc. are properly disposed of.

Do not just dispose these materials with your normal household waste, but make sure that they are fed to a recovery. Please follow the notes and markings on the packaging.

Disposal of batteries

Batteries must not be disposed of as domestic waste or thrown into fire. Dispose of the batteries according to national or local regulations regarding hazardous waste. To protect the environment, dispose of empty batteries at your retail store or at appropriate collection sites.

Disposal of your old device

This product is subject to the European Waste Electrical and Electronic Equipment Directive (WEEE) in its currently valid version. Do not dispose with your normal household waste.

Dispose this device through an approved waste disposal firm or through your local waste facility. When discarding the device, comply with the rules and regulations that apply in your country. If in doubt, consult your local waste disposal facility.