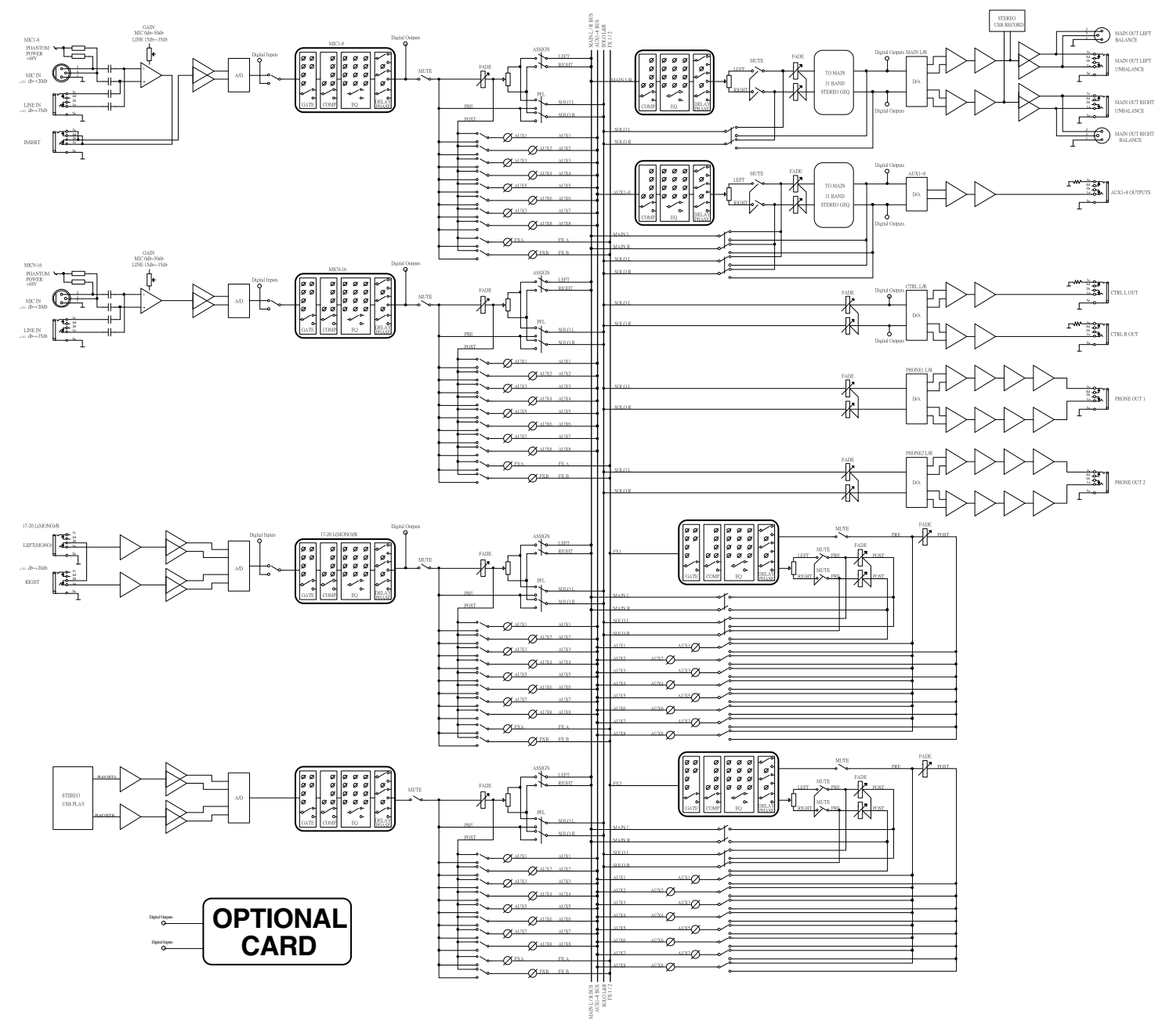
MIC1-8
PHANTOM POWER +48V
MIC IN
LINE IN
INSERT
GAIN
MIC 0db~50db
LINE 15db~35db
A/D
Digital Inputs
MIC1-8
GATE
COMP
EQ
DELAY/ DELAY
Digital Outputs
MUTE
FADE
ASSIGN
LEFT
RIGHT
PFL
SOLO L
SOLO R
PRE
POST
AUX1
AUX2
AUX3
AUX4
AUX5
AUX6
AUX7
AUX8
FX A
FX B
MAIN L/R BUS
AUX1-8 BUS
SOLO L/R
FX 1/2
MAIN L/R
COMP
EQ
DELAY/ DELAY
MUTE
LEFT
RIGHT
FADE
TO MAIN
31 BAND
STEREO GEQ
Digital Outputs
MAIN L/R
D/A
STEREO
USB RECORD
MAIN OUT LEFT BALANCE
MAIN OUT LEFT UNBALANCE
MAIN OUT RIGHT UNBALANCE
MAIN OUT RIGHT BALANCE
AUX1-8
AUX1-8 OUTPUTS
MIC9-16
PHANTOM POWER +48V
MIC IN
LINE IN
MIC9-16
CTRL L/R
CTRL L OUT
CTRL R OUT
PHONE1 L/R
PHONE OUT 1
PHONE2 L/R
PHONE OUT 2
17-20 L/MONO/R
LEFT(MONO)
RIGHT
17-20 L/MONO/R
STEREO
USB PLAY
PLAY OUT L
PLAY OUT R
FX1
FX2
OPTIONAL
CARD