451582

Flyht Pro Speaker Tour Case Uni 2x 10"
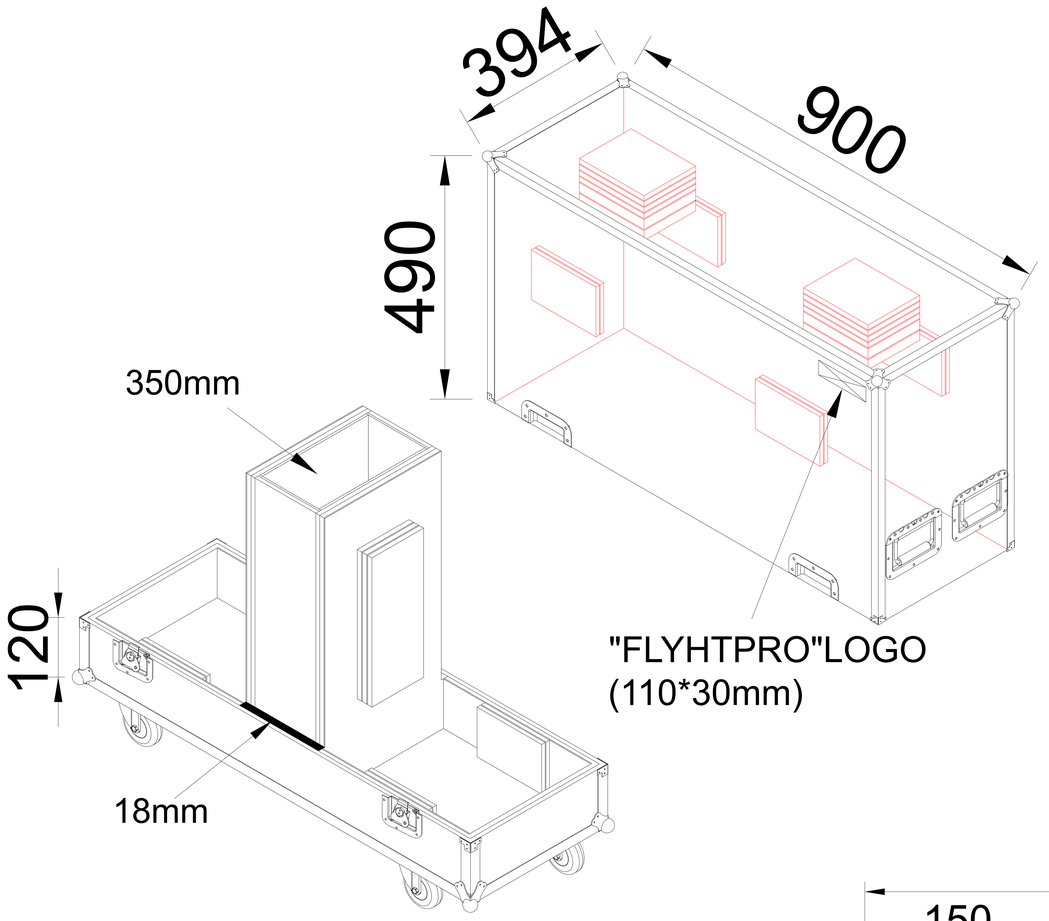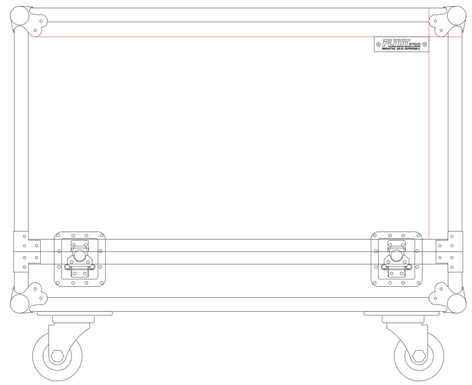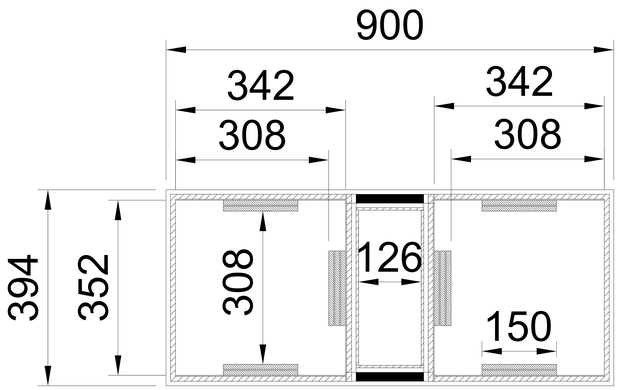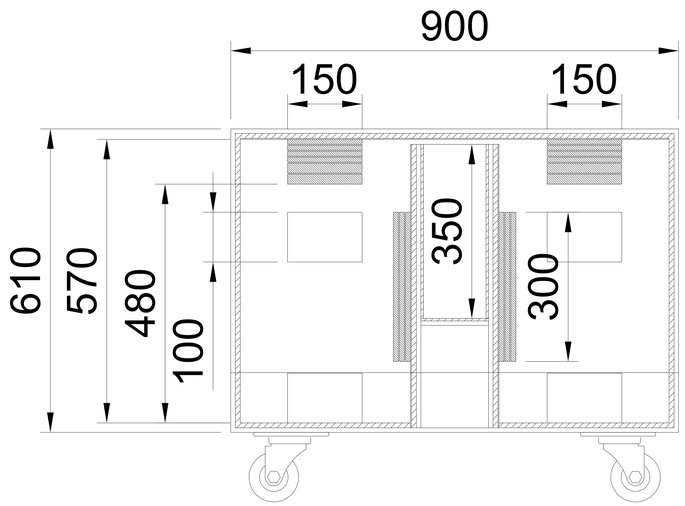
External Dims.: 900*394*610mm