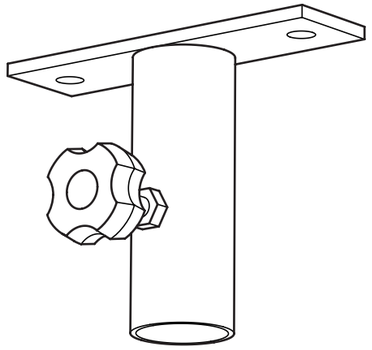

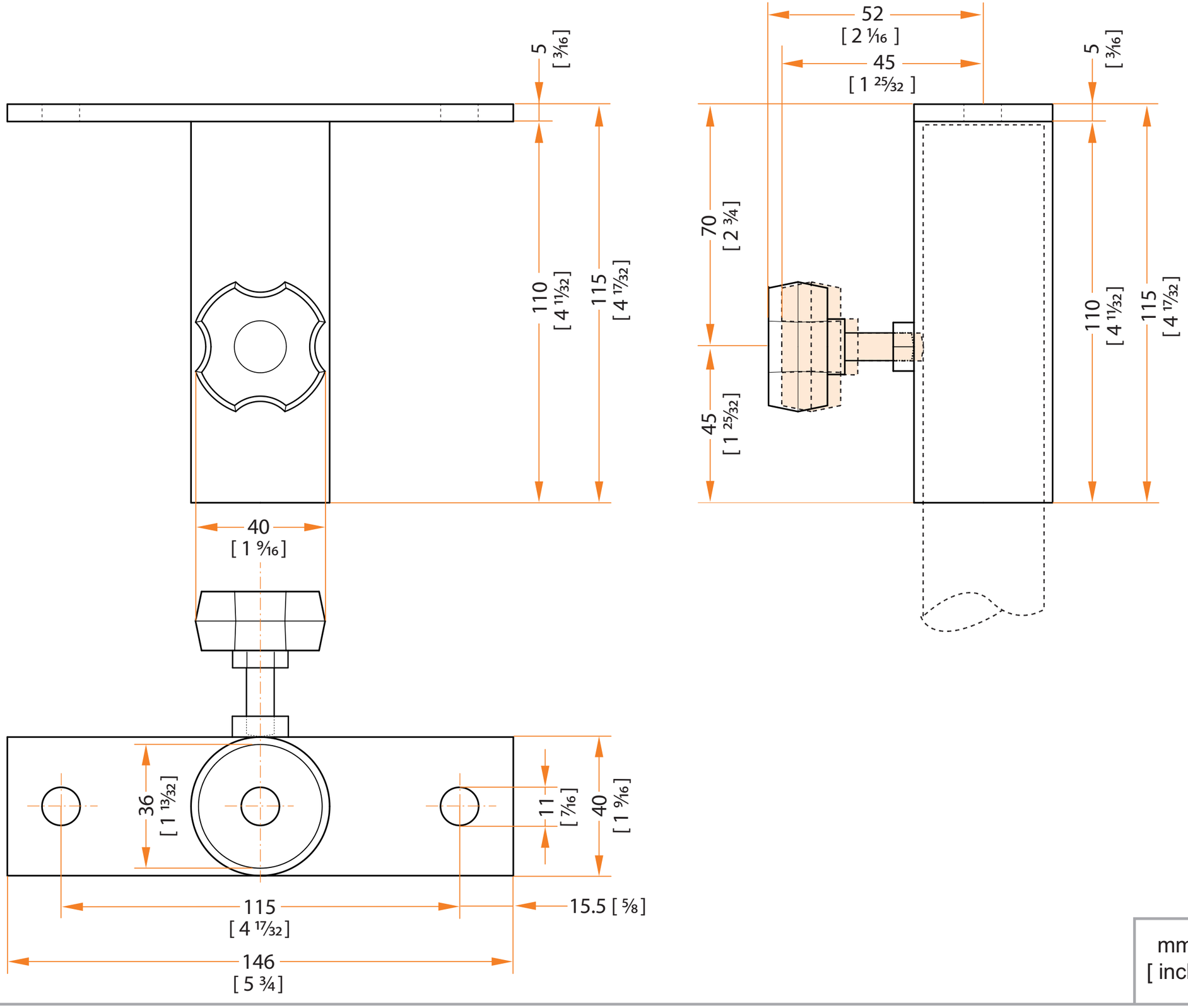
52
[2 1/16]
45
[1 25/32]
5
[3/16]
70
[2 3/4]
45
[1 25/32]
110
[4 11/32]
115
[4 17/32]
40
[1 9/16]
36
[1 13/32]
11
[7/16]
40
[1 9/16]
115
[4 17/32]
15.5 [5/8]
146
[5 3/4]

mm
[inch]